User Manual

Adley LED Ceiling Fan

1.37 m (54in.)

MODEL: 20482 Brushed Nickel

MODEL: 20475 Bronze

MODEL: 20628 White

120V 60Hz, MADE IN CHINA

Customer Assistance
1-866-885-4649

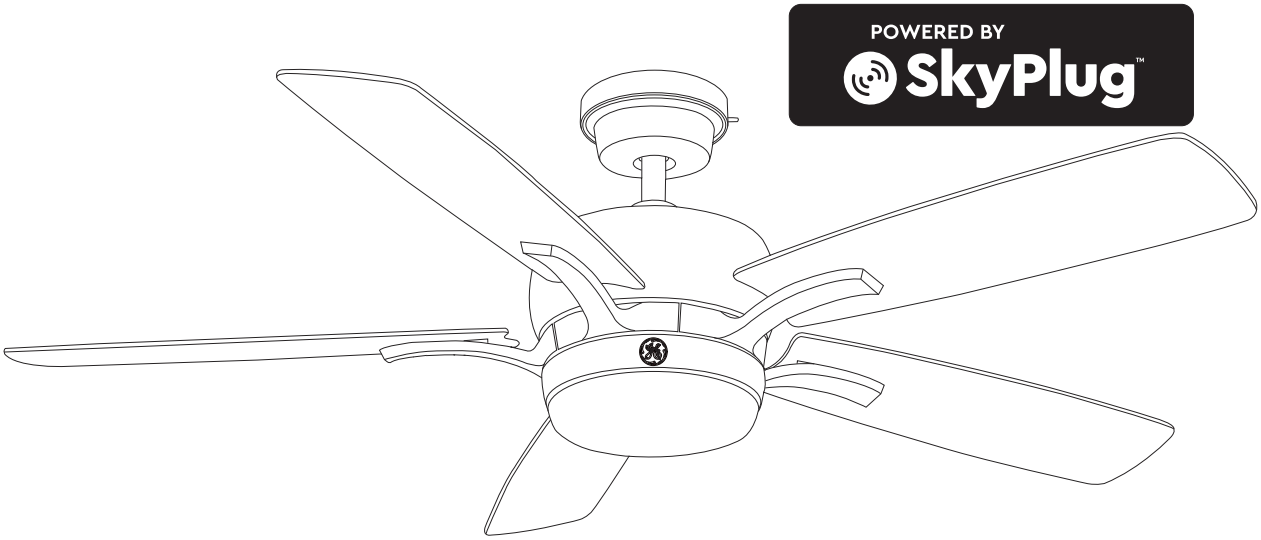

Contact a qualified electrician or call the Customer Care Service Team at 1-866-885-4649
Customer Service hours of operation are 9:00AM-5:00PM EST -Monday-Friday
customerservice@skyplug.com

Register your GE Branded fan for warranty coverage on
www.gelightingandfans.com

Note: Installation videos for GE Branded fans with SkyPlug technology can be viewed and downloaded on www.gelightingandfans.com

NV02-20190311

Before Beginning Installation

WATCH VIDEO

You have purchased a GE Ceiling Fan with SkyPlug Technology.
To learn about this NEW AND IMPROVED MOUNTING TECHNIQUE
Please view the 3-minute demonstration video.

2 Easy Ways to Watch Video:

1. Immediately view on your phone (For IOS11 versions or later)
   - Open camera and hover over QR Code.

2. View online at www.gelightingandfans.com.

No APP Needed

Tools Needed (Not Supplied)

Flathead Screwdriver (1# screwhead recommended)

Phillips Screwdriver

Safety Glasses

Step Ladder

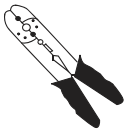

Wire Stripper

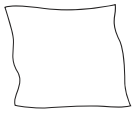

Soft Cloth

ATTENTION: NEW TECHNOLOGY !

Practice new SkyPlug Technology before installing fan <u>for an easier experience.</u>

a Remove two rubber inserts from canopy and discard.

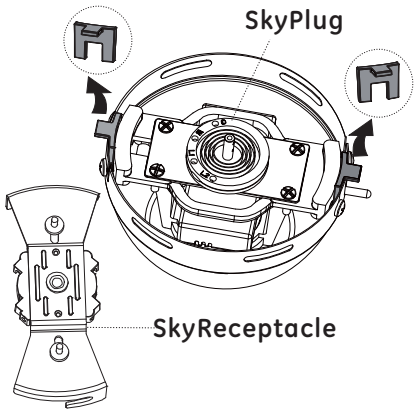

b Line up SkyReceptacle onto SkyPlug in a "+" formation.

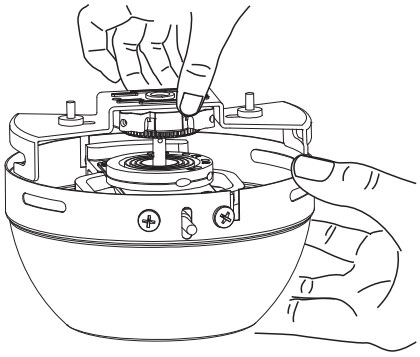

c While pushing up on push lever, insert Receptacle into SkyPlug. Release lever.

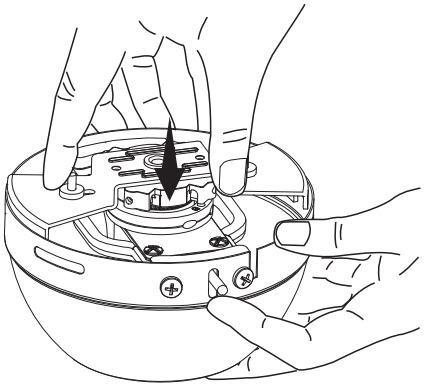

d Push down on Receptacle. Once fully engaged, the locking system will "click".

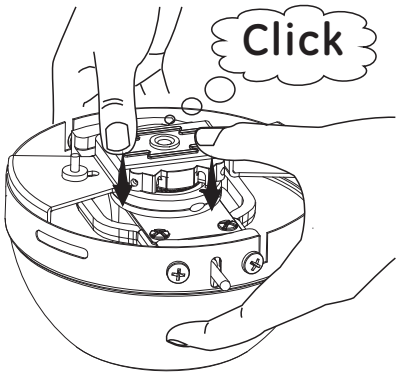

e While holding canopy, turn Receptacle clockwise.(Loose side screws if needed)

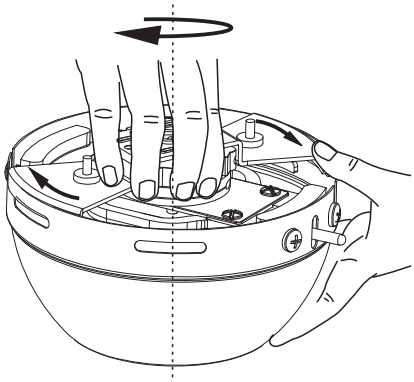

f **TO RELEASE SKYPLUG:** Hold canopy and turn SkyReceptacle to left. Press up on push lever to disengage.

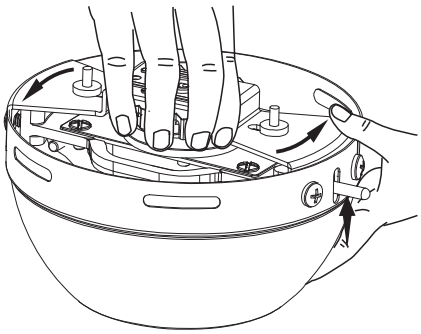

Scan the QR code or go to <u>www.gelightingandfans.com</u> to view installation video.

Follow Instruction Manual to complete fan installation.

Questions? Call 1-866-885-4649.

Hardware Included

Carefully unpack and identify each part to make sure you have everything ready for installation. Lay out each part on a clean area such as a table or floor. Check to make sure you have the following:

ATTENTION: Parts are not to scale.

Hardware Bag

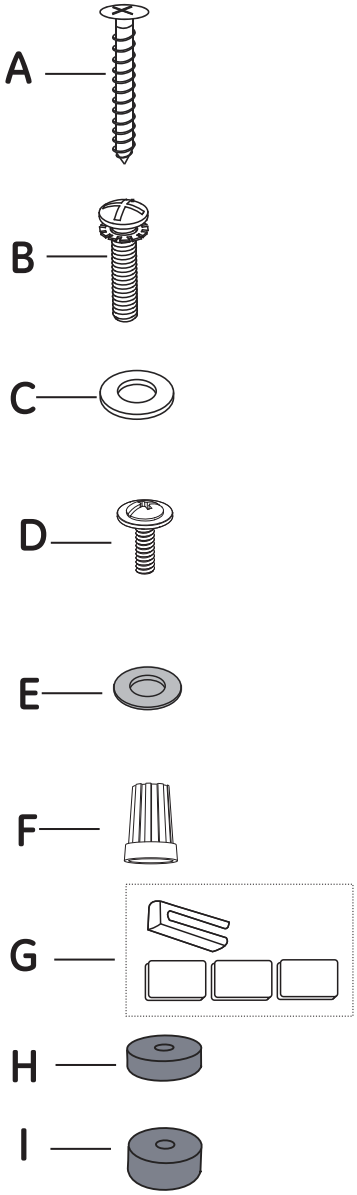

Remote Control

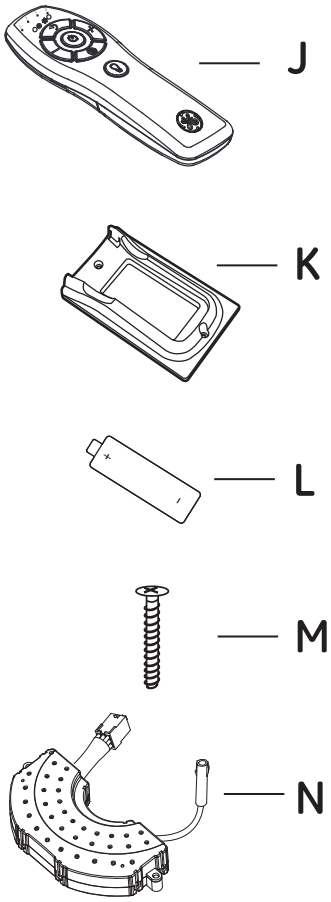

PART	DESCRIPTION	QUANTITY
A	Wood screw (Long)	2
B	Mounting screw (with lock washer)	2
C	Flat washer	2
D	Blade screw	15+1 Extra
E	Fiber Washer	15+1 Extra
F	Wire connector	4
G	Balance Kit	1
H	4mm Rubber Washer	2
I	7mm Rubber Washer	2
J	Transmitter	1
K	Transmitter Holder	1
L	AAA Battery	2
M	Wood Screw (Short)	2
N	Receiver (Pre-installed inside fan motor assembly)	1

Package Contents

Carefully unpack and identify each part to make sure you have everything ready for installation. Lay out each part on a clean area such as a table or floor. Check to make sure you have the following:

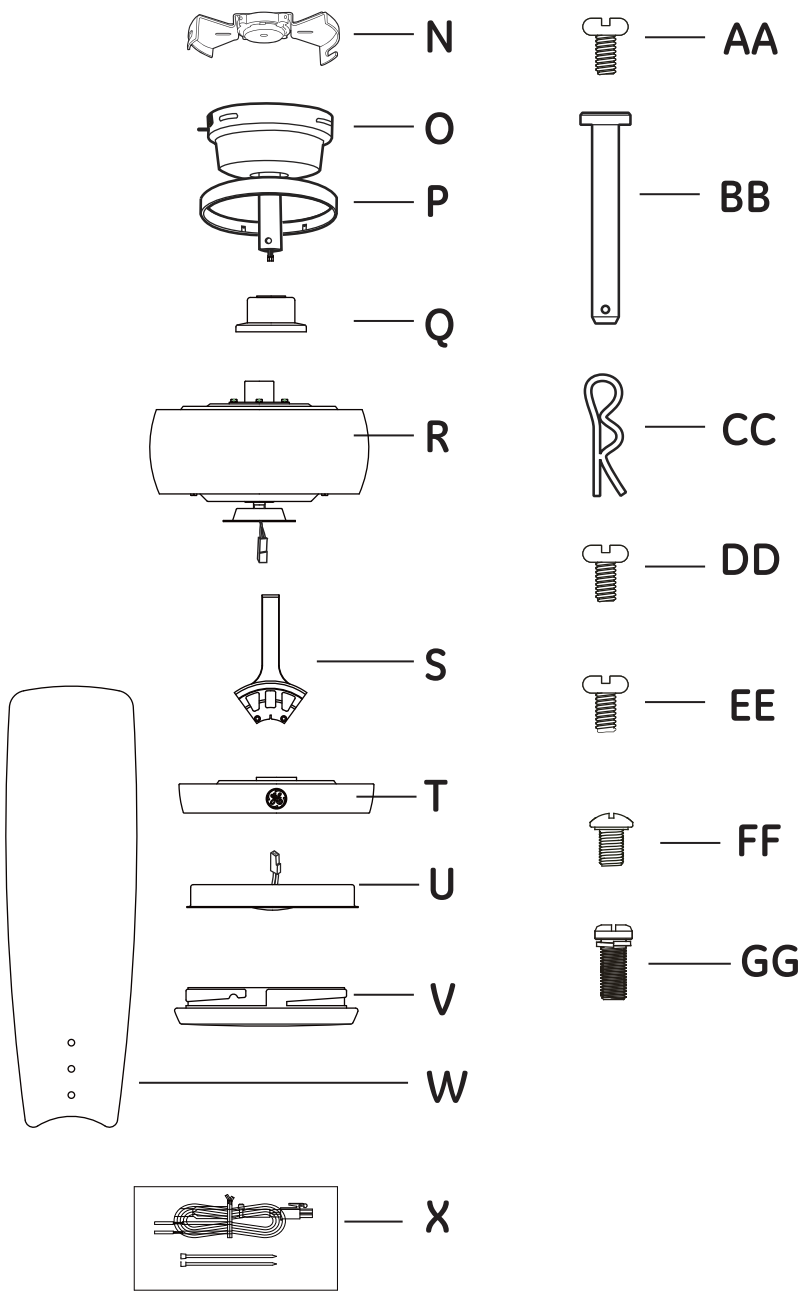

PART	DESCRIPTION	QUANTITY
N	SkyReceptacle	1
O	Canopy Assembly	1
P	Canopy Trim Ring	1
Q	Coupling Cover	1
R	Fan Motor Assembly	1
S	Blade Holder	5
T	Light Kit Pan	1
U	LED Light Kit	1
V	Glass Shade	1
W	Set of Blades	5
X	Wire extension Keep this for longer downrod (option sold separately) installation. Instructions are available at www.gelightingandfans.com)	1
PRE-INSTALLED PARTS		
AA	Collar Set Screw (Preassembled to coupling of motor assembly)	2
BB	Clevis Pin (Preassembled to coupling of downrod assembly)	1
CC	Cotter Pin (Preassembled to coupling of downrod assembly)	1
DD	Light Kit Pan Mounting Screw (Preassembled to mounting plate of motor assembly)	3
EE	Light Kit Mounting Screw (Preassembled to coupling of motor assembly)	3
FF	Canopy Mounting Screw (Preassembled to motor assembly)	4
GG	Blade Holder Screw with Spring Washer (Preassembled to motor assembly)	10

Fan Installation Drawing

Review important safety instructions before installation.

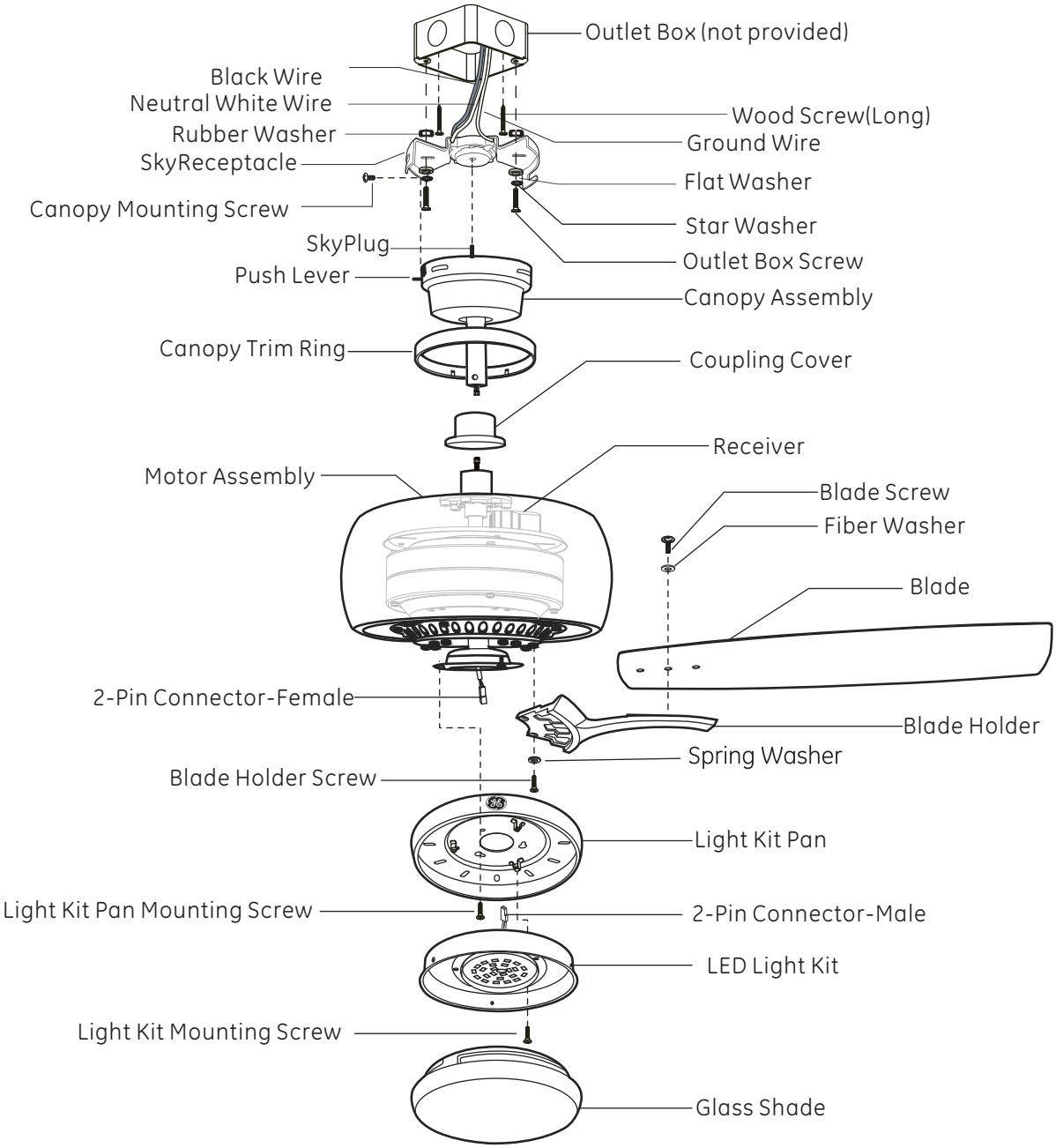

Safety Rules

READ AND SAVE THESE INSTRUCTIONS

1. To reduce the risk of electric shock, ensure electricity has been turned off at the circuit breaker or fuse box before beginning.

2. All electrical connections must be made in accordance with local codes, ordinances and/or the National Electric Code. Electrical installation should be performed by a qualified licensed electrician.

3. WARNING: to reduce the risk of electrical shock or fire, do not use this fan with any solid-state fan speed control device. It will permanently damage the electronic circuitry.

4. CAUTION: To reduce the risk of personal injury, use only the screws provided with the outlet box.

5. The weight of the fan is 10.69kg (23.52 lb.). The outlet box and support structure must be securely mounted and capable of reliably supporting a minimum of 15.9 kg (35 lb.). Use only UL Listed outlet boxes marked "FOR FAN SUPPORT."

6. The fan must be mounted with a minimum of 2.1m (7 ft.) clearance from the trailing edge of the blades to the floor.

7. Avoid placing objects in the path of the blades.

8. To avoid personal injury or damage to the fan and other items, be cautious when working around or cleaning the fan.

9. Do not use water or detergents when cleaning the fan or fan blades. A dry dust cloth or lightly damped cloth will be suitable for cleaning.

10. After making electrical connections, spliced conductors should be turned upward and pushed carefully up into the outlet box. The wires should be spread apart with the grounded conductor and the equipment-grounding conductor on one side of the outlet box and ungrounded conductor on the other side of the outlet box.

11. All screws must be checked and re-tightened where necessary during installation.

12. This fan is suitable for room sizes up to 225 square feet (20.9 square meters).

WARNING: To reduce the risk of fire, electric shock or personal injury, mount fan to outlet box marked acceptable for fan support with the screws provided with the outlet box.

WARNING: To reduce the risk of fire, electric shock or personal injury, mount to outlet box marked "acceptable for fan support of 15.9 kg (35 lb.) or less" and use mounting screws provided with the outlet box. Most outlet boxes commonly used for the support of light fixtures are not acceptable for fan support and may need to be replaced. Due to the complexity of the installation of this fan, a qualified licensed electrician is strongly recommended.

NOTE: Fan must be installed at a maximum distance of 6 m (20 ft.) from the transmitting unit for proper signal transmission between the transmitting unit and fan's receiving unit.

CAUTION: Do no use wall switch with dimmer function.

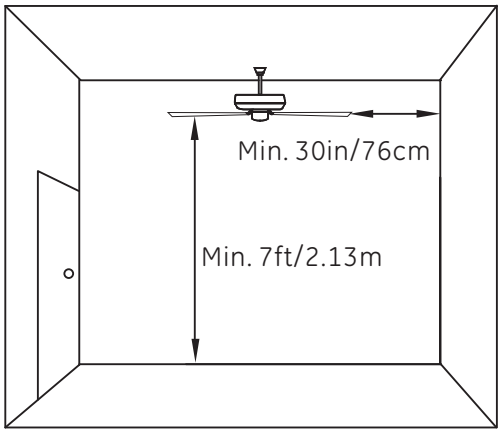

Basic Guidelines For Working With Electricity

SAFETY TIPS

1. Before working on a circuit, go to the main service panel and remove the fuse or turn off the breaker that controls that circuit.

2. Tape a sign to the panel warning others to leave the circuit alone while you work.

3. Before touching any wire, use a voltage tester to make sure it's not live.

4. Whenever you check for voltage in a receptacle, check both outlets; each may be controlled by a separate wiring circuit.

5. When replacing fuses, turn off the main power first. Make sure your hands and feet are dry, and place one hand behind your back to prevent electricity from making a complete circuit through your chest. Touch a plug fuse only by its insulated rim.

6. Remove cartridge fuses with fuse puller.

7. Use tools with insulated handles and ladders made of wood or fiberglass.

8. To protect children, place safety cover over any unused outlets.

9. Vaulted ceiling angle is not to exceed 11 degrees.

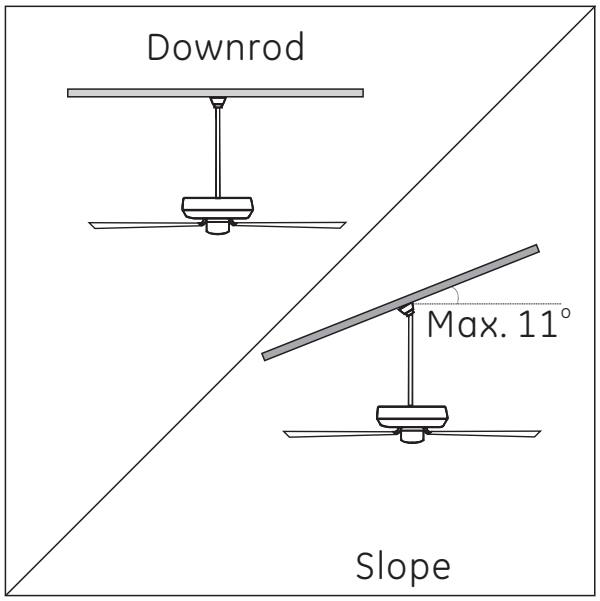

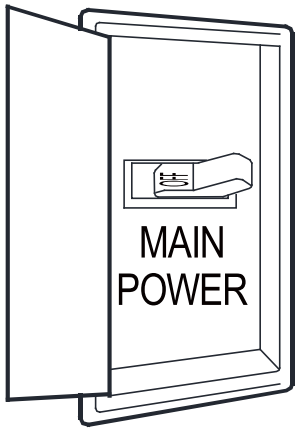

Shut off main power at the circuit breaker or fuse panel before removing old fixture.

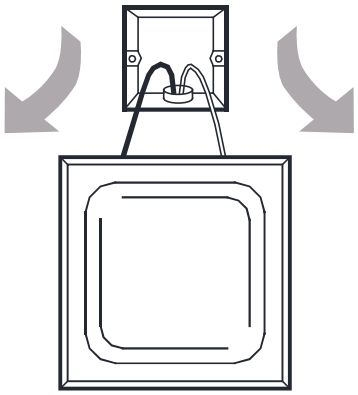

Remove old fixture. Disconnect wire.

SkyReceptacle Typical Wire Configurations

IMPORTANT: For remote control fans, L1 is the only active live /hot terminal. The hot/live wire from house supply must be inserted into L1 terminal for the fan to operate.

WIRING DIAGRAM #1: Typical Wiring Configuration for 1 Wall Switch

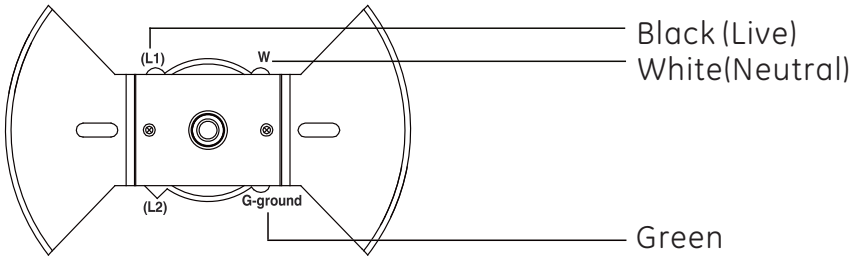

WIRING DIAGRAM #2: Typical Wiring Configuration for 2 Wall Switches

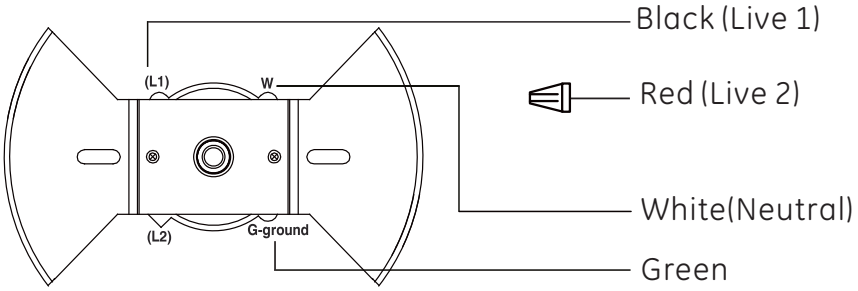

WIRING DIAGRAM #3: Typical Wiring Configuration for 2 Wall Switches

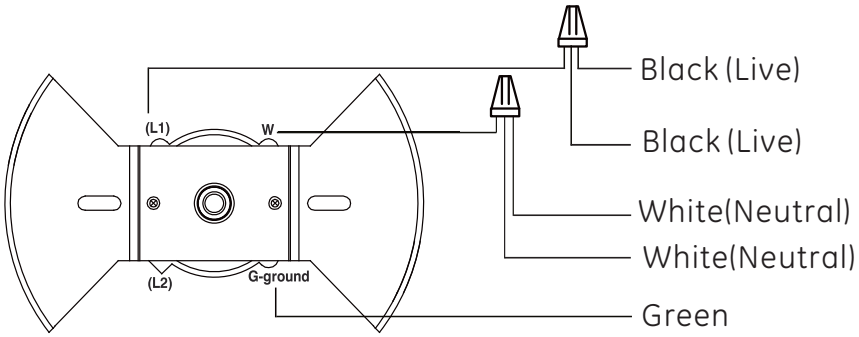

WIRING DIAGRAM #4: Wiring Configuration with more than 1 of the same colored wires in the outlet box

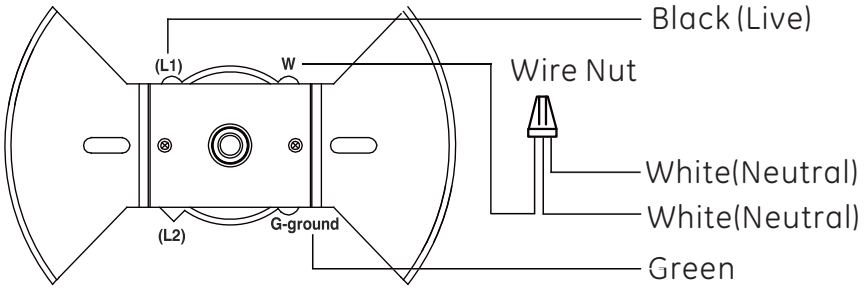

NOTE: If you do not have standard wiring configurations and have questions about the wiring in your outlet box, please contact a qualified electrician, or call customer service 1-866-885-4649.

NOTE: If you have multiple wires connected together, add a jumper lead and insert jumper lead into terminal. Only one single wire can be inserted into terminal.

SkyReceptacle Installation

Important: Always install SkyReceptacle with rubber washers.

Fig 1.

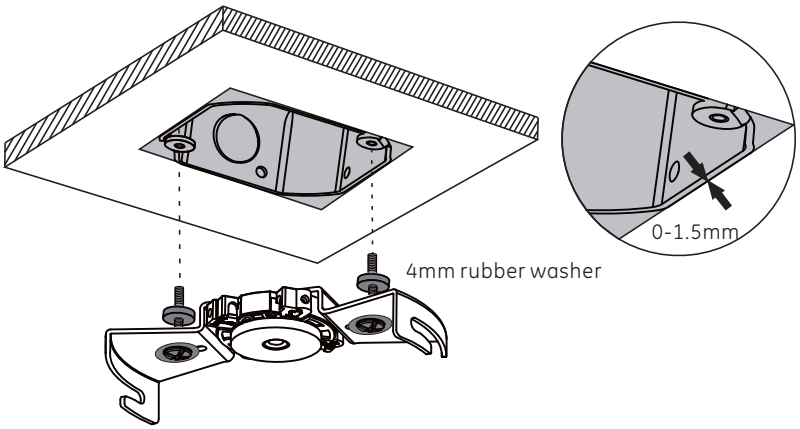

0-1.5mm Gap

If your box is flush with the ceiling, or recessed less than 1.5mm, install with 4mm rubber washer.

Fig 2.

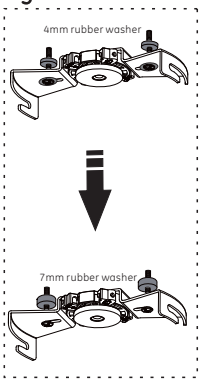

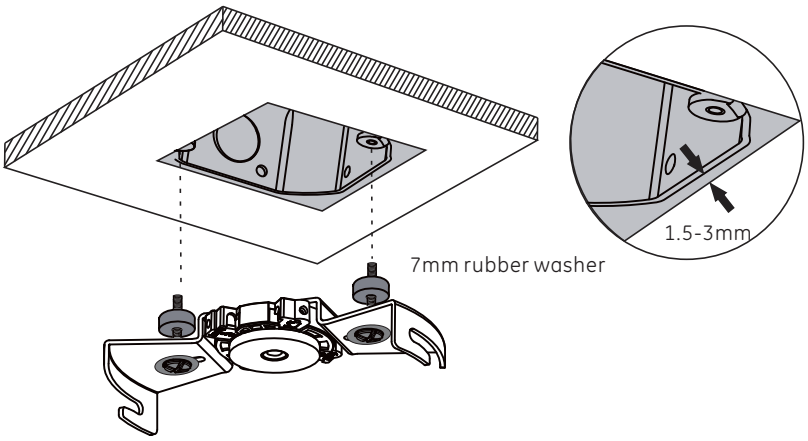

1.5-3mm Gap

If your box is recessed between 1.5mm and 3mm, use 7mm rubber washer.

Fig 3.

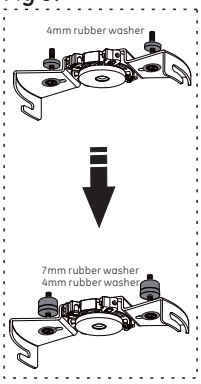

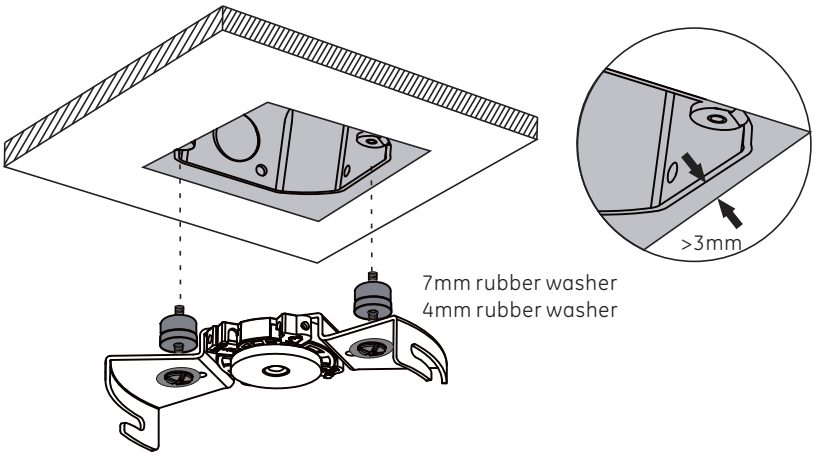

>3mm Gap

If your box is recessed more than 3mm, use 7mm and 4mm rubber washer.

SkyReceptacle Installation

①

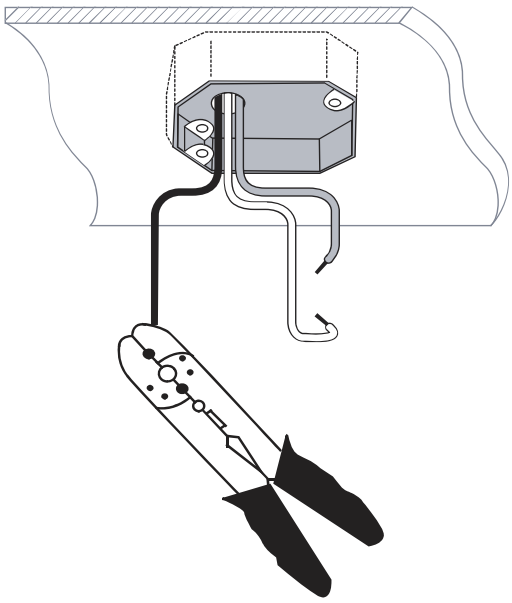

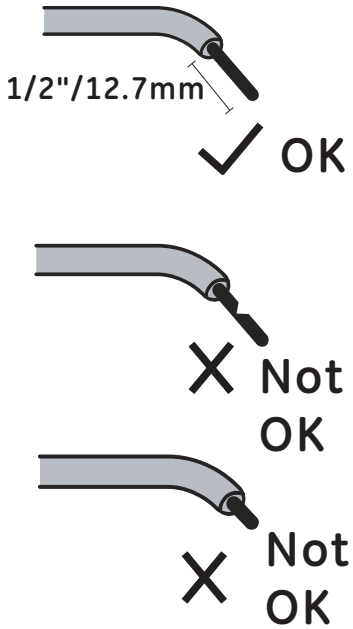

②

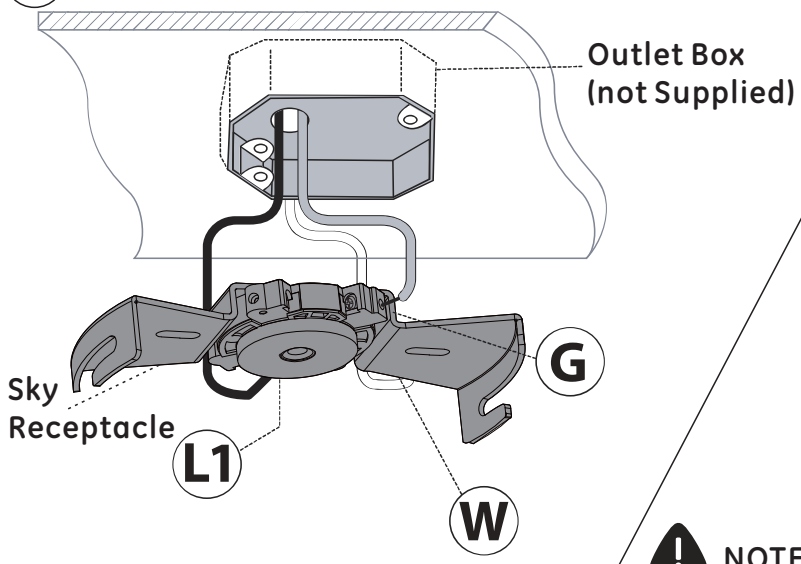

Insert wires into terminal, tighten screw to secure wires.

Screw torque 6.3 lb-in.

Terminal's Bottom view on Sky Receptacle

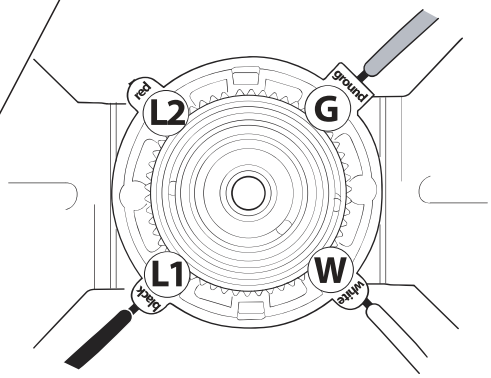

NOTE: If you do not have standard wiring configurations, please contact a qualified electrician or call customer service 1-866-885-4649.

All Electrical Wiring should be done in accordance with the National Electrical Code.

SkyReceptacle Installation

③

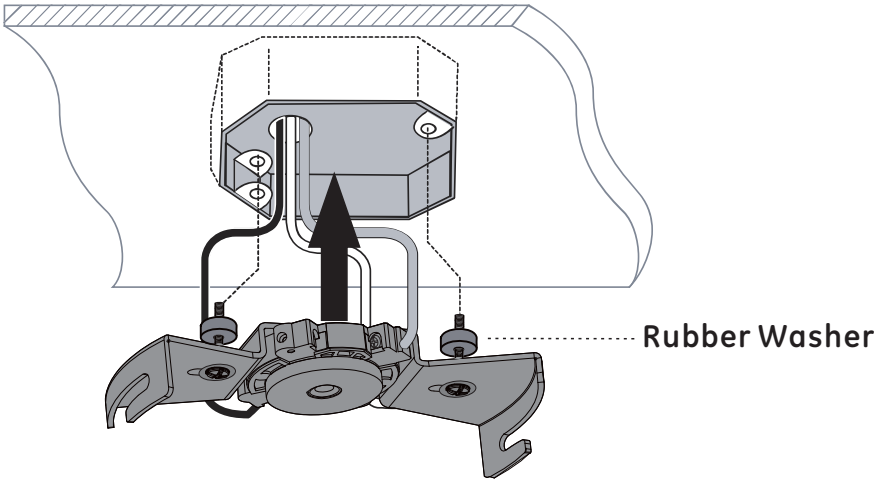

Using the rubber washer when installing receptacle ensures proper placement of the receptacle on the ceiling. We recommend using the rubber washer in all installations.

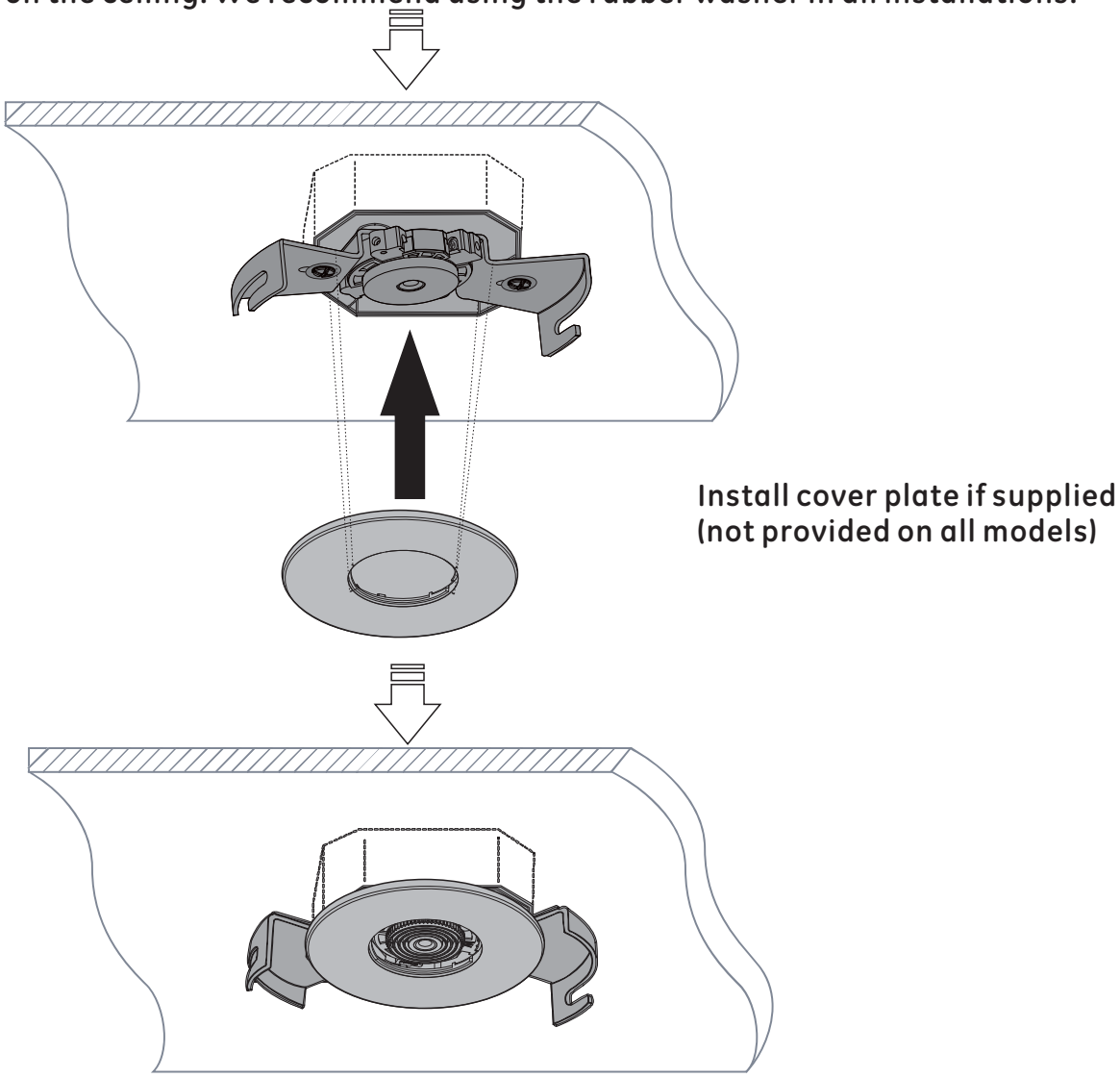

Fan Assembly

④

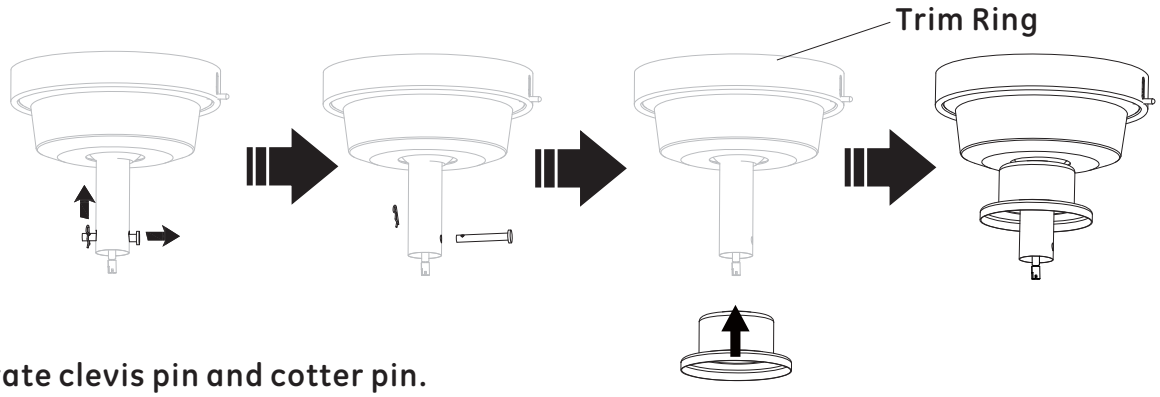

Separate clevis pin and cotter pin.
Slide coupling cover up onto the downrod.
(Make sure trim ring is on canopy.)

⑤

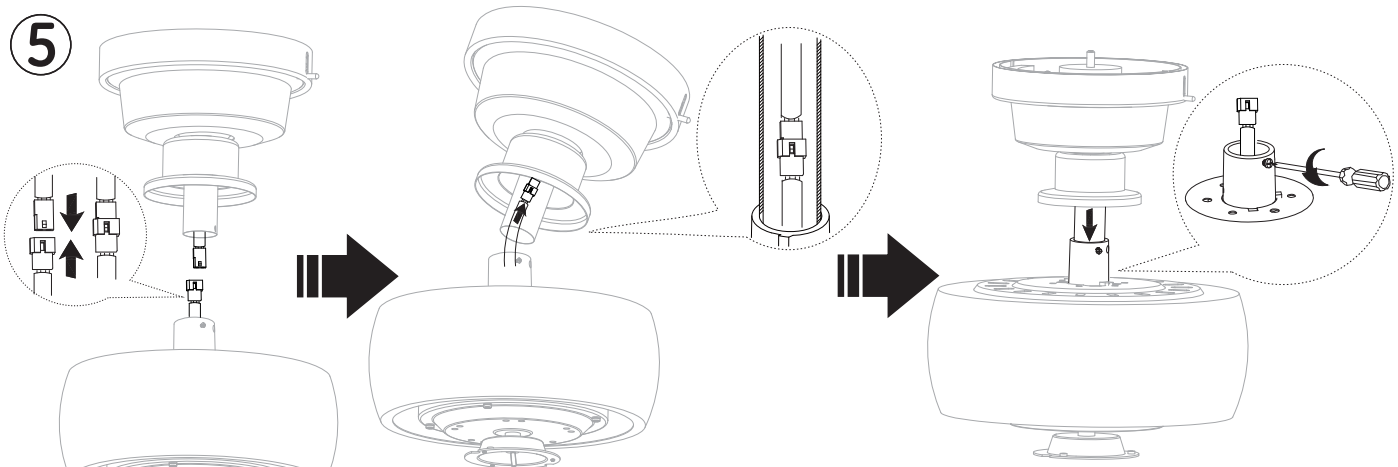

Attach connectors.

Push up the connector into the downrod.

Loosen but not remove 2 screws on motor assembly collar, insert the downrod into the collar.

TIP: Gently pull up on white sleeving inside canopy to help wire slide into downrod.

⑥

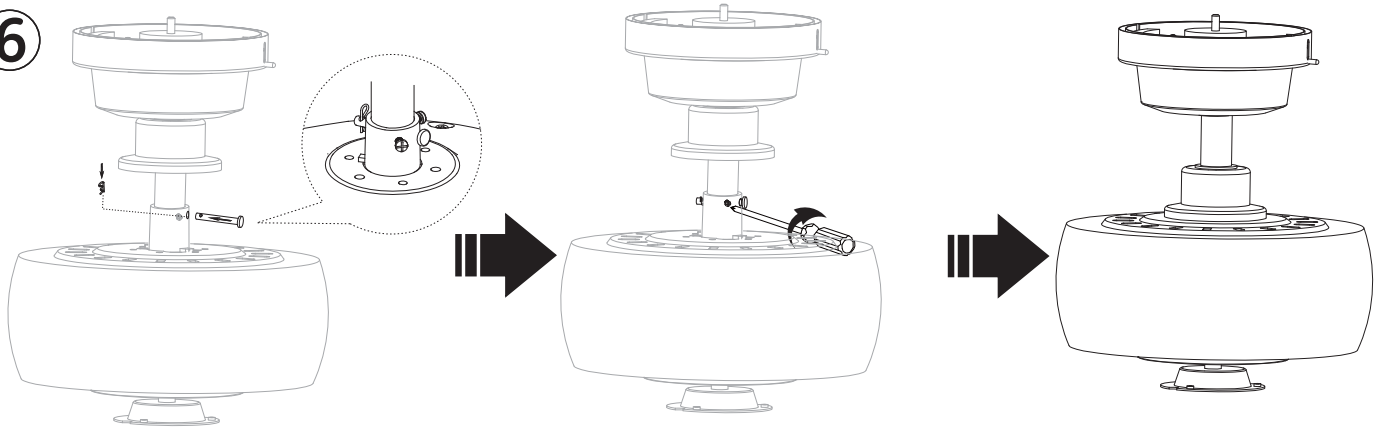

Re-attach clevis and cotter pin.

Tighten 2 motor collar screws.

Fan Installation

9B

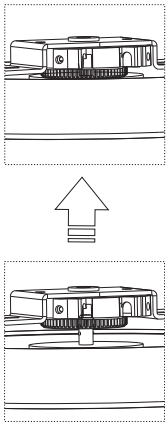

IMPORTANT :
SkyPlug must be fully engaged into SkyReceptacle.

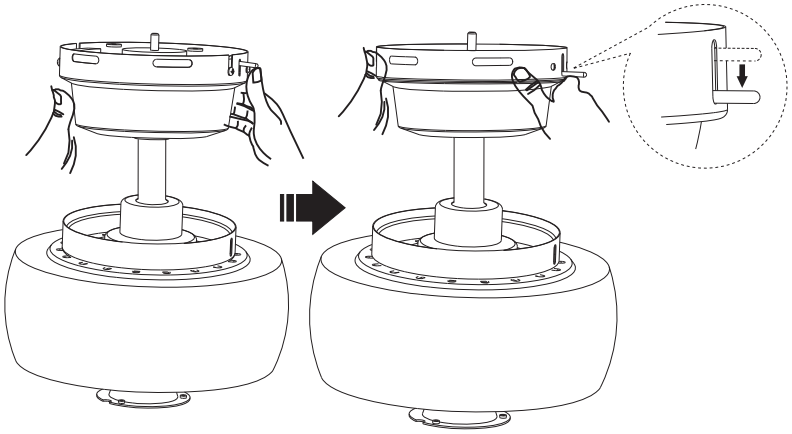

Once plug is fully inserted, let go of push lever while supporting fan.

9C

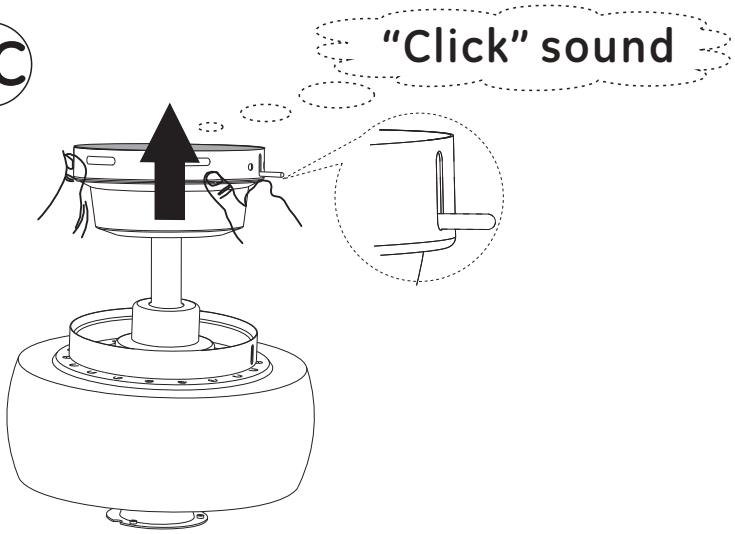

IMPORTANT :
Push lever must be in DOWN position once installed.

Push up on fan to lock plug into receptacle (listen for locking "click").

9D

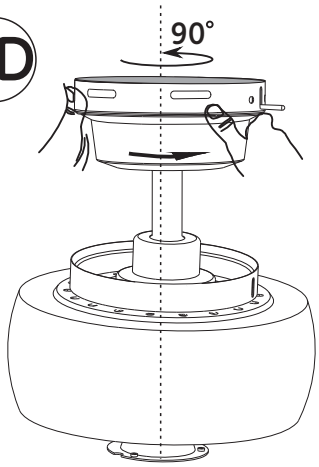

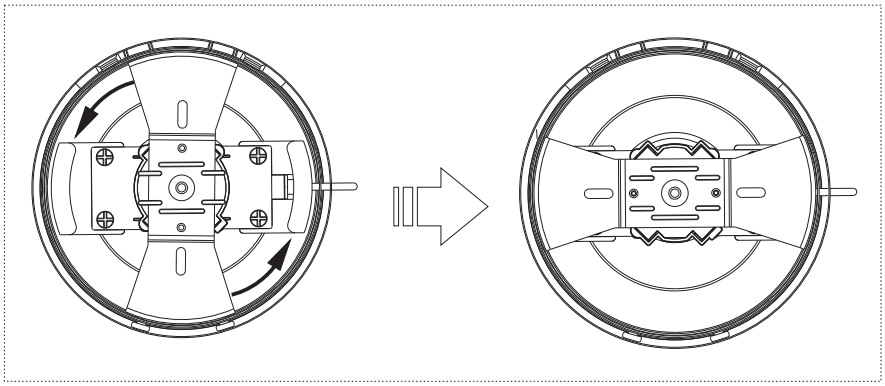

Turn fan to the right (counter clockwise) to engage into slots and activate the final locking mechanism.

Fan Installation

THERE ARE TWO OPTIONS TO INSTALL THE FAN.

OPTION 1: **Install fan body to ceiling and then complete the assembly of fan parts with fan body mounted on the ceiling.**
-For this installation, follow Steps **7-15.**

TIP: Watch video (**page 1**) and practice attaching SkyPlug to SkyReceptacle. (**page 2**)

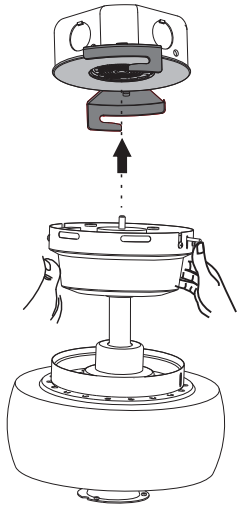

Install fan body to ceiling

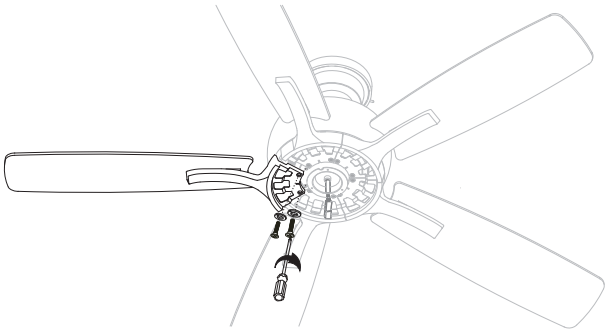

Attach blades

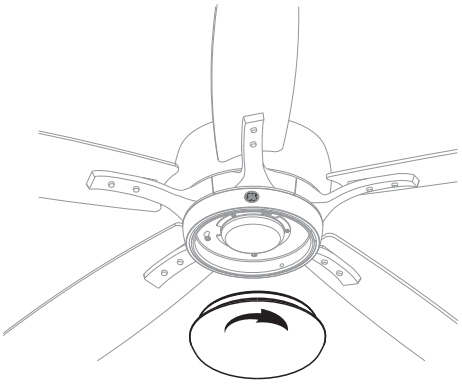

Attach light kit

OPTION 2: **Assemble the fan on floor/table and install fully assembled fan to ceiling.**
-Follow steps **13-15** to first assemble blades and light kit to fan.
-Then follow steps **7-12** to install fully assembled fan to ceiling.

TIPS:
-Watch video (**page 1**) and practice attaching SkyPlug to SkyReceptacle. (**page 2**)
-Practice attaching the fan motor to ceiling (step **9A-9E**) before installing assembled fan with blades and light kit.
-To release fan from ceiling, follow steps on **Page 22**.

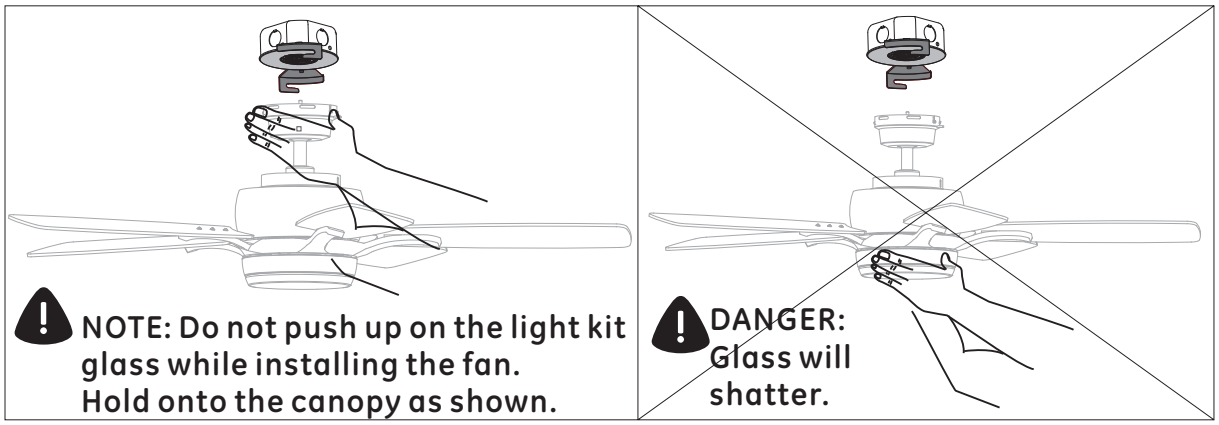

Fan Installation

7

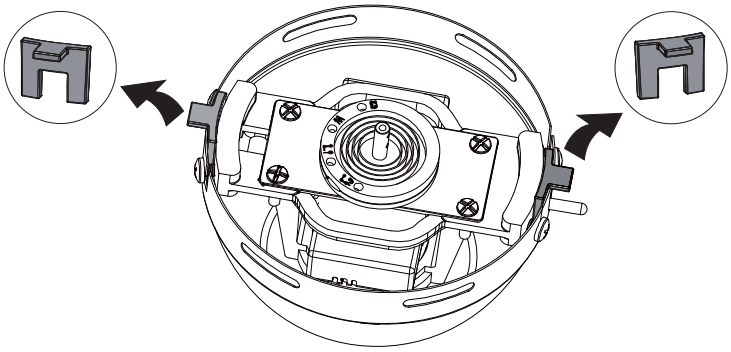

Remove rubber inserts (loosen four mounting screws slightly if needed) from canopy and discard.

8

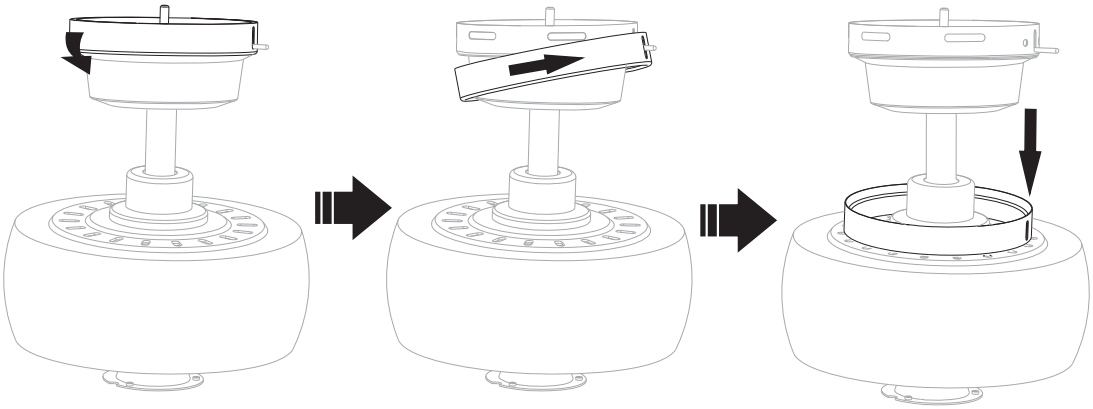

Slide down canopy trim ring from canopy.

9A

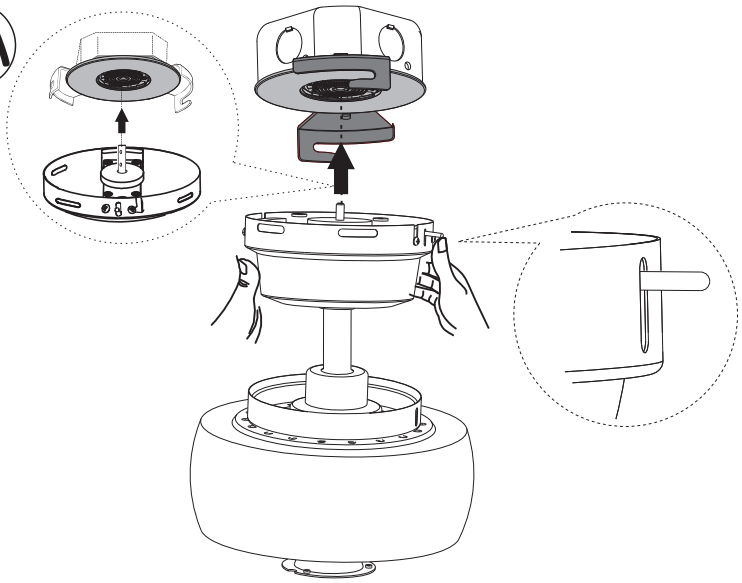

IMPORTANT:

For proper mounting, the SkyPlug and SkyReceptacle need to be lined up in a "+" formation.

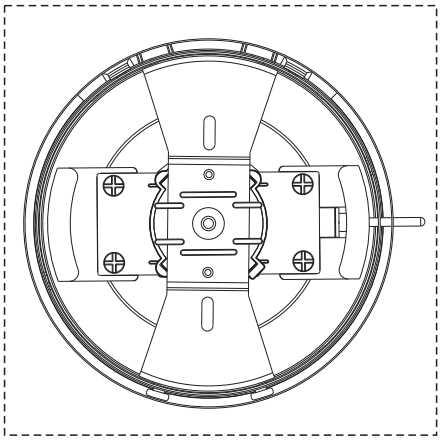

Lift fan, press up on push lever.
Line up SkyPlug to SkyReceptacle mounted in ceiling.
Insert SkyPlug into SkyReceptacle (Keep push lever pushed up while inserting).

Fan Installation

10

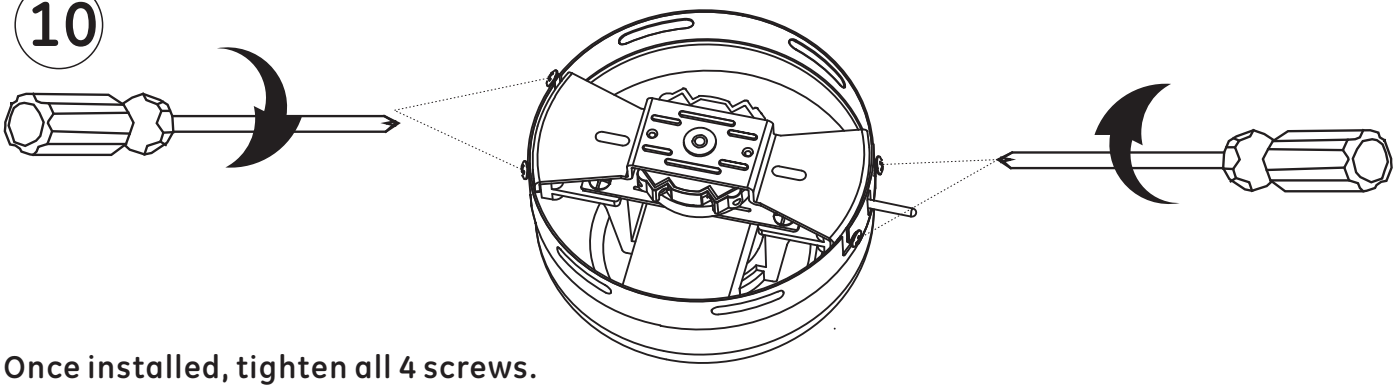

Once installed, tighten all 4 screws.

11

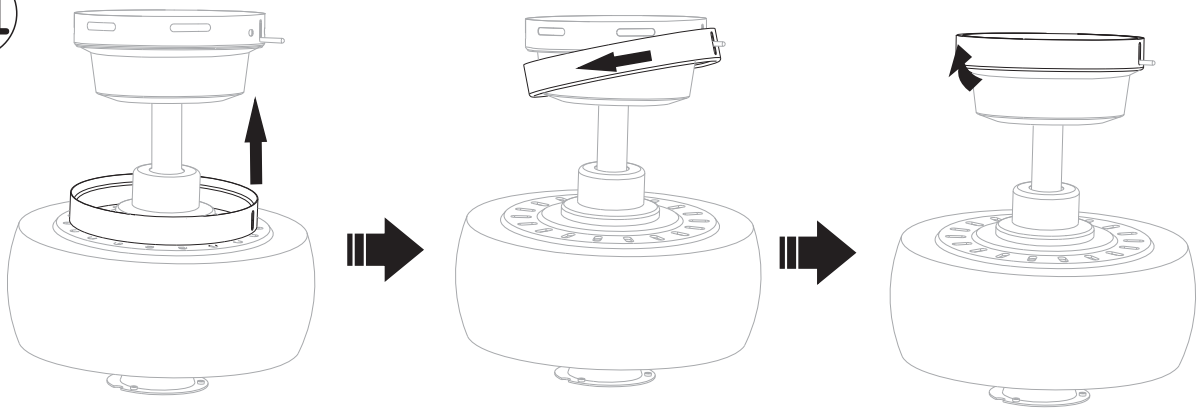

Reinstall trim ring, being careful not to depress the push lever.

12

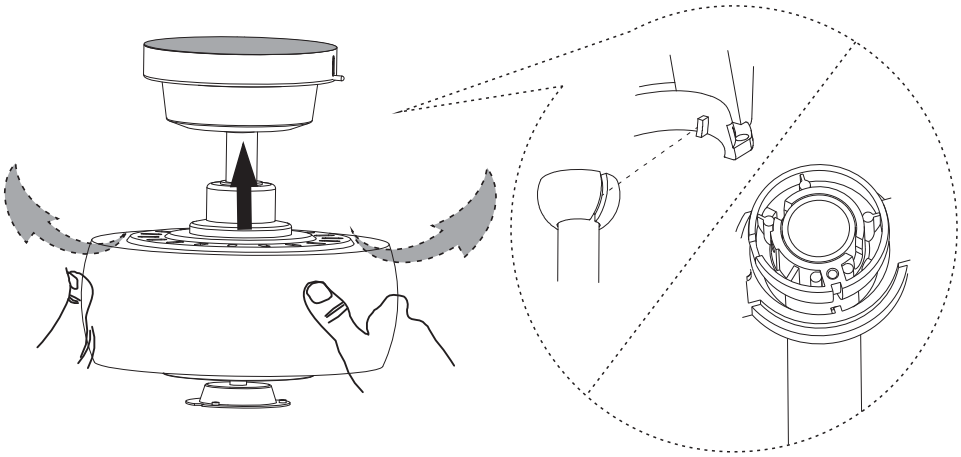

Adjust fan housing so ball is properly seated in bracket.

Fan Installation

13

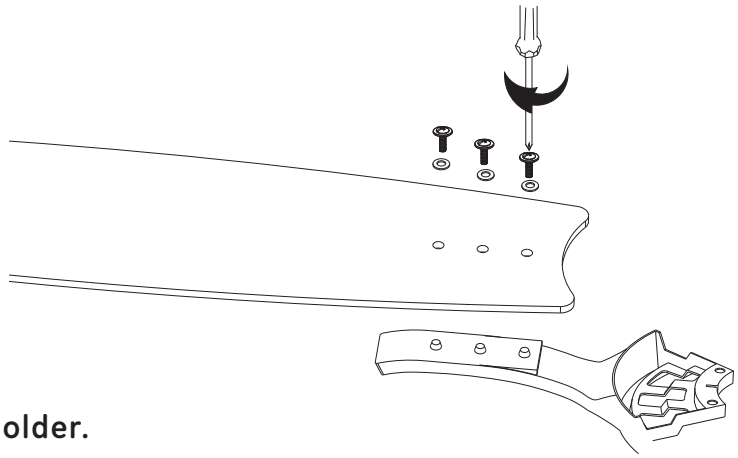

Install blade holder.

14

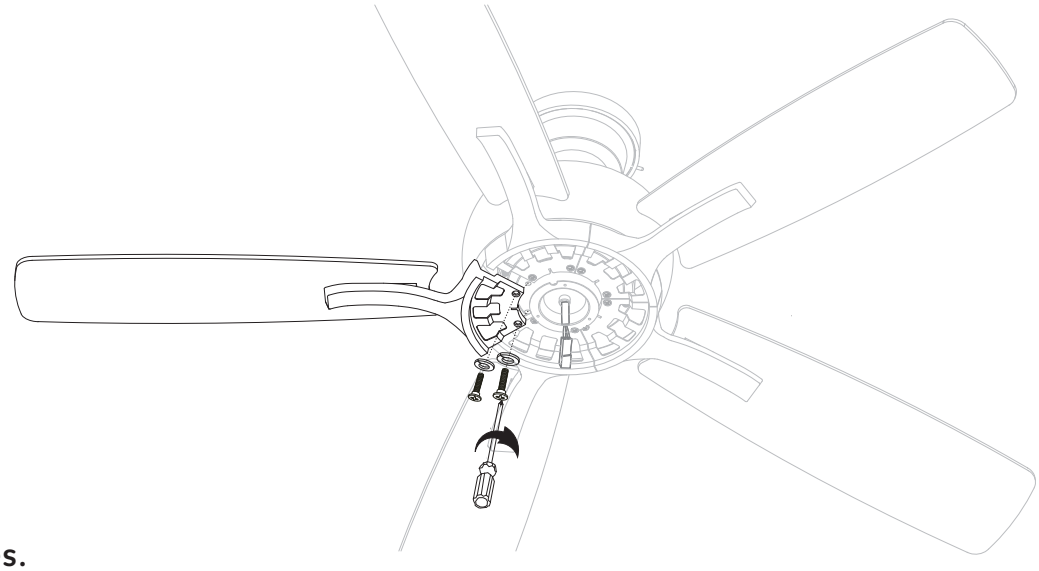

Install blades.

15

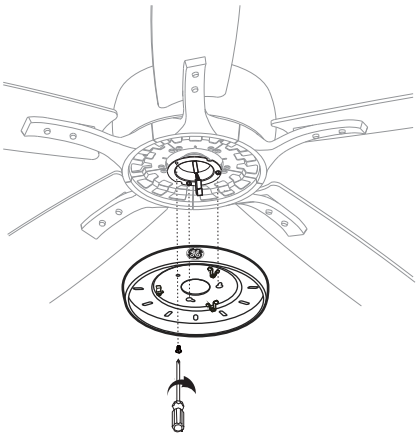

Install light kit pan.

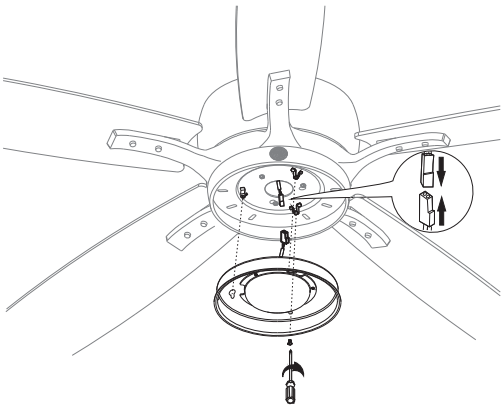

Install LED light kit.

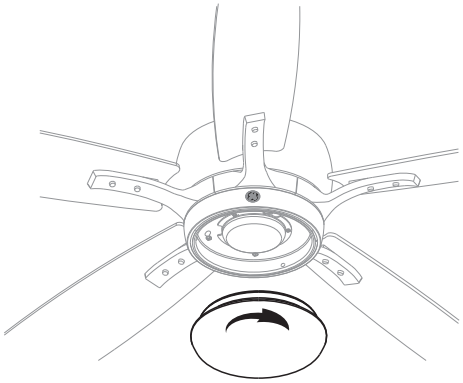

Install shade-turn to secure.

Remote Control Start-Up Guide

PART#FAN61T-4SP

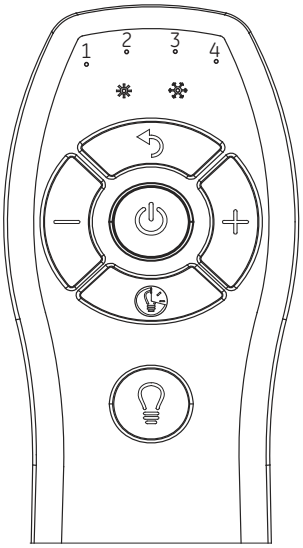

TO SET UP REMOTE FOR ONE FAN

Step 1. Restore power to ceiling fan.

Step 2. Install two 1.5-volt AAA batteries. (provided)

Step 3. Press the " " button to turn ON/OFF fan.

Step 4. Press the " " button to operate the light.
To turn light ON/OFF-Press and release button.
To dim-Press and hold button.

Note: The blue light will illuminate to indicate the transmitter is working.

TO SET UP REMOTES FOR MULTIPLE FANS

Only restore power and set up one fan at a time.

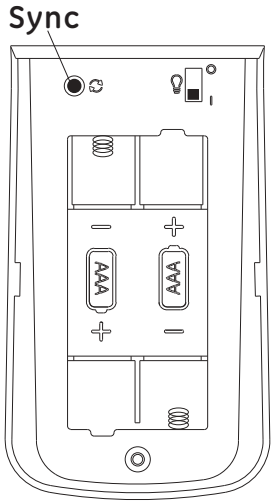

SYNCING INSTRUCTIONS FOR ONE FAN

If the Remote Control is not communicating with the fan:

Step 1. Shut off power to the fan at wall switch. Then, at the circuit breaker, reset the power (turn OFF and back ON).

Step 2. ***Within 30 seconds*** of resetting the power, turn wall switch back on, push the Sync " " button for about 5-10 seconds, until the light on the fan flashes 3 times.

SYNCING INSTRUCTIONS FOR MULTIPLE FANS

If there is interference with other fans, Universal Remotes are available. Please call Customer Service at 1-866-885-4649 for more information.

FCC ID: 2AAZPFAN61T4SP / I C : 11037A-FAN61T4SP
This device complies with part 15 of the FCC Rules and RSS-210 Issue 8. Operation is subject to the following two conditions:
1. This device may not cause harmful interference
2. This device must accept any interference received, including interference that may cause undesired operation.
CAUTION: Any changes or modifications not expressly approved by the party responsible for compliance could void the user's authority to operate the equipment.
NOTE: This equipment has been tested and found to comply with the limits for a Class B digital device pursuant to part 15 of the FCC Rules and the limits pursuant to RSS-210 Issue 8.
These limits are designed to provide reasonable protection against harmful interference in a residential installation. This equipment generates, uses and can radiate radio frequency energy and, if not installed and used in accordance with the instructions, may cause harmful interference to radio communications. However, there is no guarantee that interference will not occur in a particular installation. If this equipment does cause harmful interference to radio or television reception, which can be determined by turning the equipment off and on, the user is encouraged to try to
correct the interference by one or more of the following measures:
-Reorient or relocate the receiving antenna.
-Increase the separation between the equipment and the receiver.
-Connect the equipment into an outlet on a circuit different from that to which the receiver is connected.
-Consult the dealer or experienced radio /TV technician for help.

Remote Control Functions

PART#FAN61T-4SP

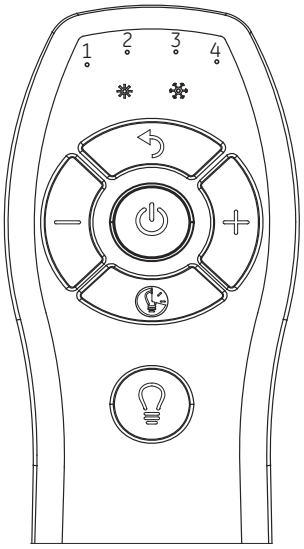

1 2 3 4 Fan speed indicators.

(summer) Indicates the fan is running counterclockwise (downward airflow).

(winter) Indicates the fan is running clockwise (upward airflow).

Changes the direction of rotation of the fan blade.

Turns fan on and reduces fan speed.

Turns fan on and increases fan speed.

Power on/off.

Delays the light turning off for approximately 5 seconds, enabling you to exit your room before the light turns off completely.

Controls the light and brightness setting.
Press and release the button to turn the light ON or OFF.
Press and hold the button to set the desired brightness.
The light button has an auto-resume, it will stay at the same brightness as the last time it was turned off.

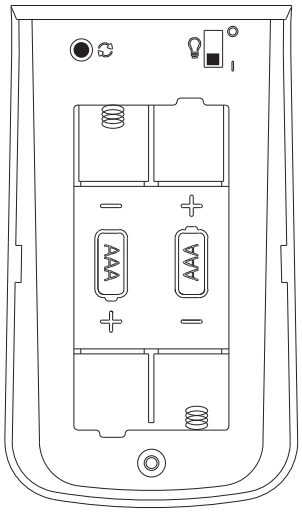

"O" and **"I"** dim switch
The dim switch should be in the "**I**" position for dimming the light. Place the switch in the "**O**" position to turn the dimming feature off.

"Sync" button
Allows receiver to pair with the code assigned by the transmitter.

NOTE:
-To prevent damage to transmitter, remove all batteries if not used for long periods.
- Always replace the whole set of batteries at one time , taking care not to mix old and new ones, or batteries of different types.
-Please contact your local batteries recycling center for proper battery disposal information.

Installing the Transmitter Holder

Select a location to install your transmitter holder. Attach the transmitter holder with the two short wood screws provided.

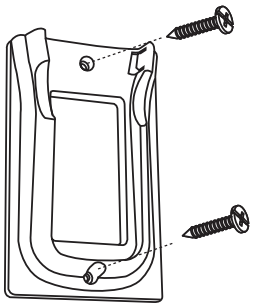

NOTE: The transmitter (remote control) must be operated at a maximum distance of 6m (20ft) from the fan for proper signal transmission.

GE WALL CONTROL

As an additional way to operate your GE ceiling fan, full functioning GE Wall Controls are available. The GE Wall Control is installed and operated from your wall switch. The control allows you to turn power ON/OFF, adjust the speed of the fan, and control light functions - including dim control.

To order go to gelightingandfans.com or call 1-866-885-4649.

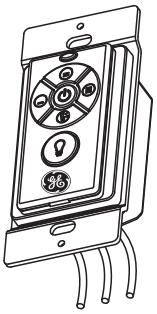

4 Speed Model#21816

Fan Operation Using Standard Wall Switch

-Only one standard wall switch can be used to turn the fan ON/OFF. The fan light and fan speed must be controlled with the included remote control.
-An optional remote control holder is included, which can be mounted near the wall switch.
-As an additional option, wall controls that operate all fan and light function are available, please visit www.gelightingandfans.com or contact customer service 1-866-885-4649 for details.

Maintenance

*** Suggestions to help you maintain your fan ***

Because of the fan's natural movement, some connections may become loose. Check the support connections, brackets, and blade attachments twice a year. Make sure they are secure. (It is not necessary to remove fan from ceiling).

*** Cleaning the fan ***

Clean your fan periodically to help maintain its new appearance over the years. Use only a soft brush or lint-free cloth to avoid scratching the finish. The plating is sealed with a lacquer to minimize discoloration or tarnishing. Do not use water when cleaning. This could damage the motor, the wood, or possibly cause an electrical shock.

*** There is no need to oil your fan. The motor has permanently lubricated sealed ball bearings ***

WARNING: Make sure the power is turned off at the electrical panel box before you attempt any repairs.

NOTE: To avoid personal injury or damage to the fan and other items, be cautious when working around or cleaning the fan.

Removing Fan From Ceiling

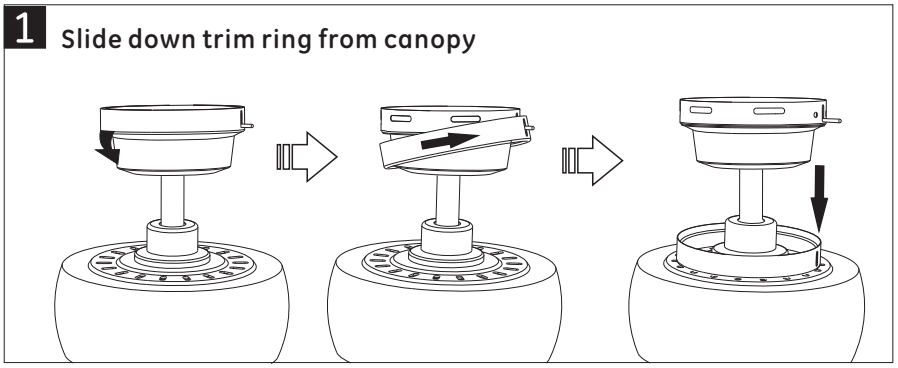

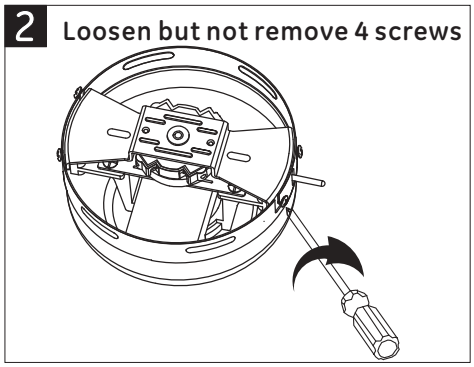

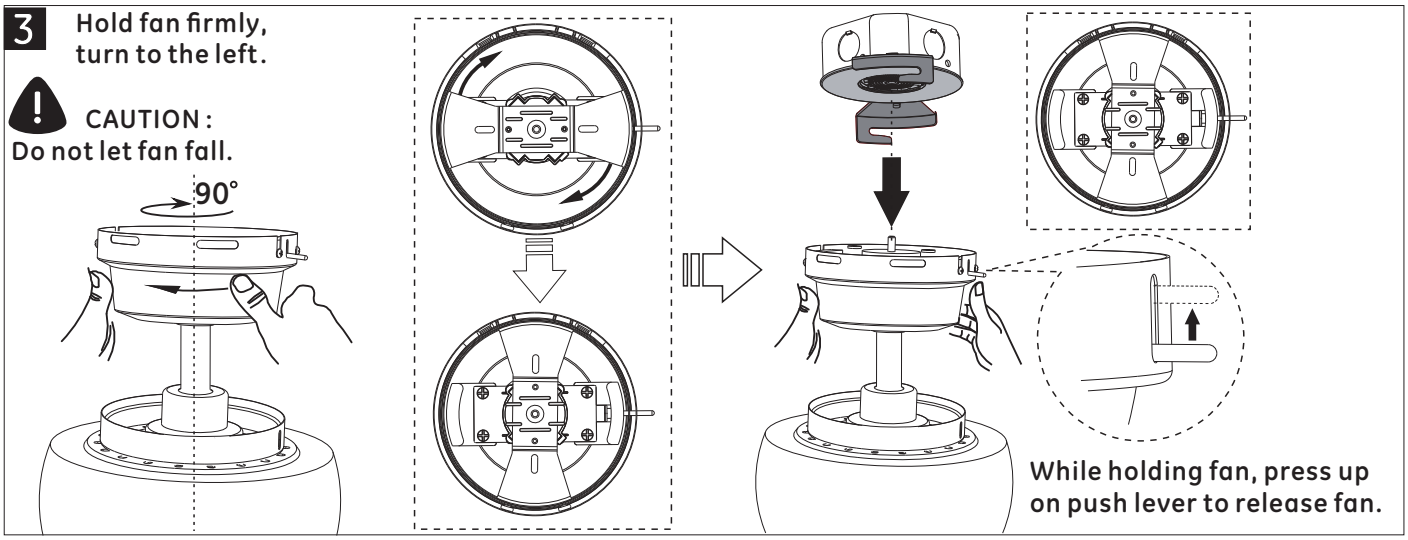

Troubleshooting

CAUTION: Switch off power supply before carrying out any of these checks.

1.SkyPlug will not insert into SkyReceptacle:
-Add rubber washers between J-box and SkyReceptacle.
See **Page 11** step 3.
-Make sure you removed the disposable rubber insert (**page 14**).
-Watch installation video on www.gelightingandfans.com.

2.Fan will not start:
-Check main and branch circuit fuses or breakers.
-Check to make sure the wall switch is in the on position.
-Check remote control operation.

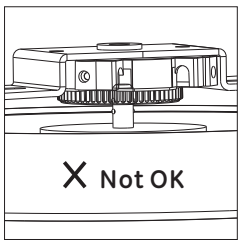

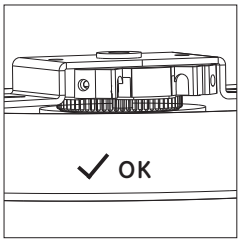

3.Fan will not operate:
-The SkyPlug on the fan canopy should be fully inserted into the receptacle. There are 2 levels of ball bearings on the plug stem. The lower set of ball bearing needs to be fully inserted into the SkyReceptacle.

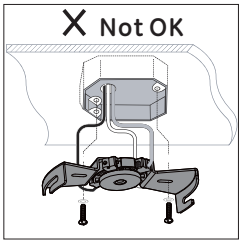

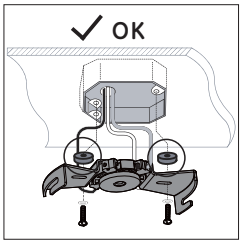

-Ensure the 4mm (or combination of washers) was used when installing the SkyReceptacle on the ceiling. (You may have an uneven outlet box). The SkyPlug must fully insert into the receptacle to make the electrical connection.

-Ensure you inserted the wires correctly into the SkyReceptacle. Black wire into L1,White wire into W, Ground into G.

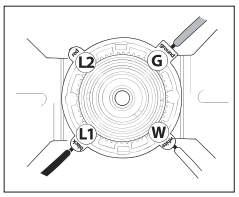

4.Fan sounds noisy:
-Make sure all motor housing screws are snug.
-Make sure the screws that attach the fan blade bracket to the motor hub is tight.
-Make sure wire nut connections are not rattling against each other or the interior wall of the switch housing.
-Allow a 24-hour "breaking-in" period. Most noises associated with a new fan disappear during this time.
-If using a ceiling fan light kit, make sure the screws securing the glassware are tight. Check that the light bulb is also secure.
-Make sure there is a short distance from the ceiling to the canopy. It should not touch the ceiling.
-Make sure your ceiling box is secure and rubber isolator pads are used between mounting bracket and outlet box.

5.The LED will not light:
-Ensure the 2-pin connector is attached/inserted correctly.
-Ensure the power supply is turned on.
-Ensure the circuit breaker is set to "ON" position.

6.Remote control will not work:
-Ensure batteries are new and installed correctly.
-Ensure the dip switches are set correctly.
-Sync the remote control by following **page 18**.

7. Blades has wobble:
-Ensure fan housing ball is properly seat in the bracket. **(page16)**
-Ensure all blade attachment screws are secure.
-If fan still has wobble, utilize included Balance Kit.

For additional troubleshooting points and frequently asked quesitons, please visit www.gelightingandfans.com.

Supplemental Instructions

Changing Existing Downrod to Longer Downrod (sold separately)

①

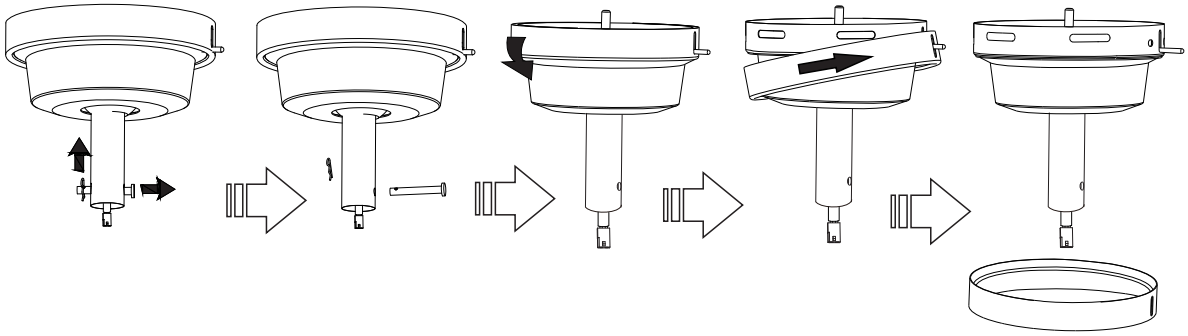

Remove cotter pin & clevis pin, slide the canopy trim ring down.

②

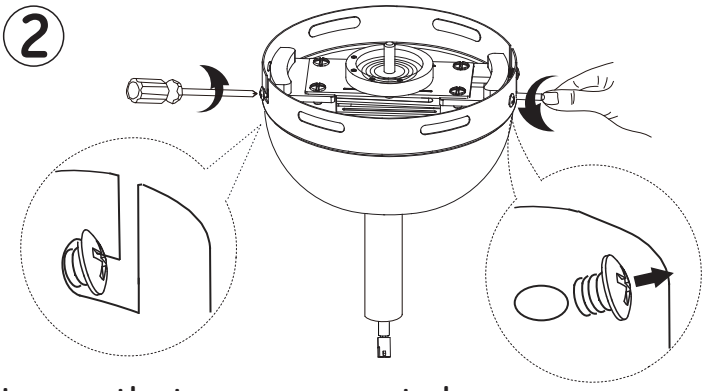

Remove the push lever.

Remove the other two screws.

Loosen the two screws seated in L slot.

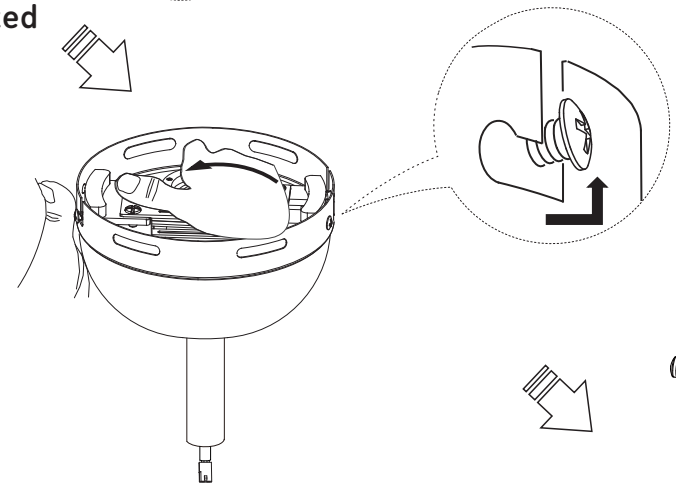

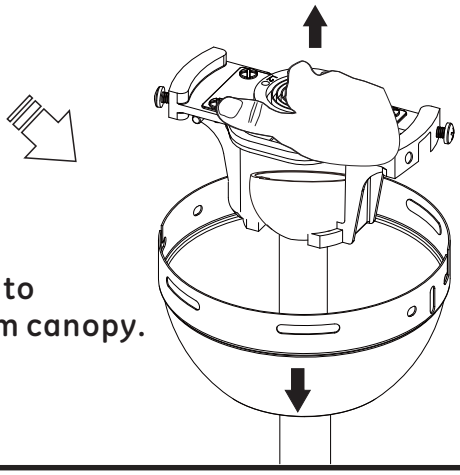

While holding the bracket, turn left to separate bracket with downrod from canopy.

Supplemental Instructions

Changing Existing Downrod to Longer Downrod (sold separately)

③

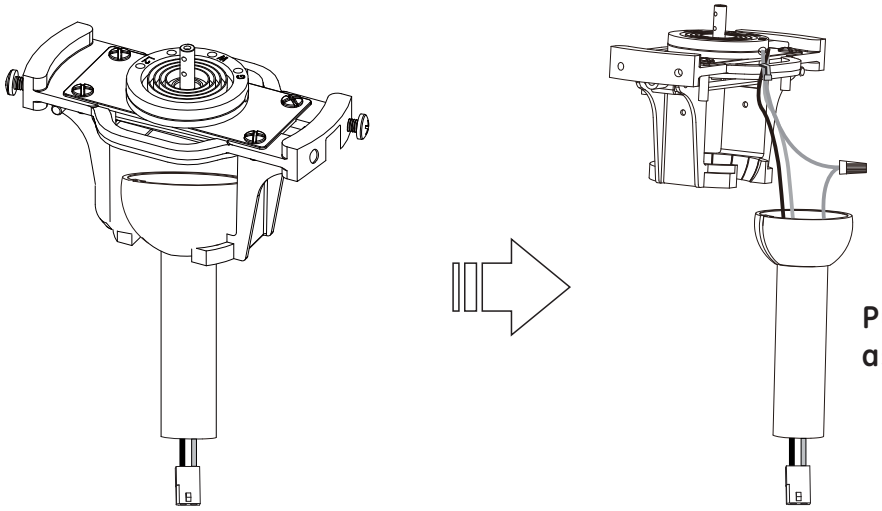

Pull out the downrod assembly from the bracket.

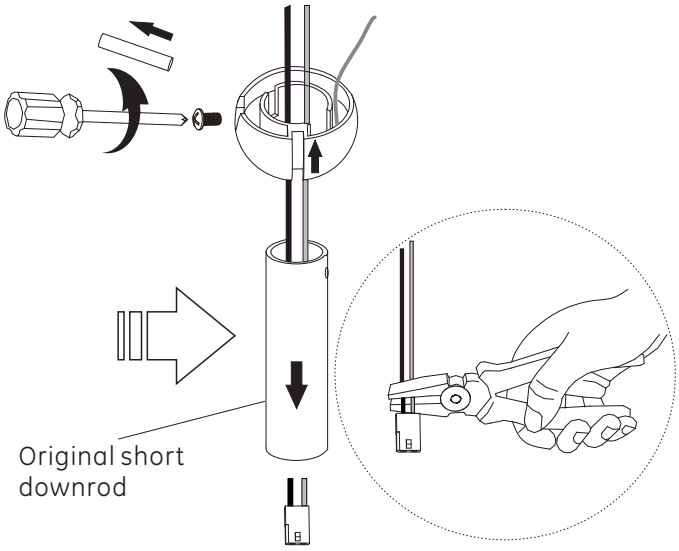

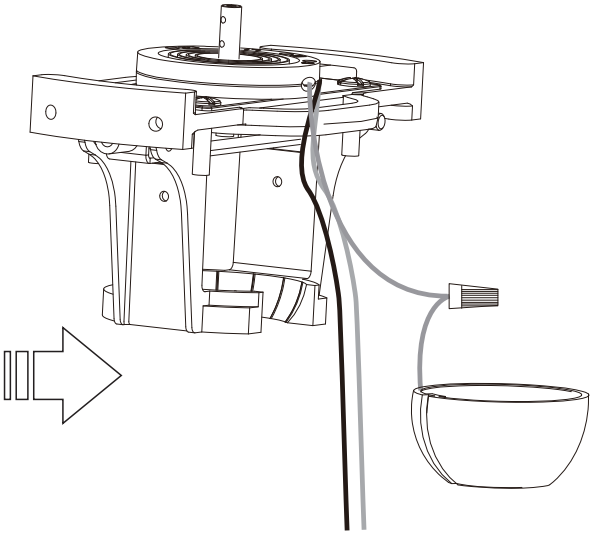

Remove the set screw and cross pin on the hanging ball to detach the original downrod. Cut the wire at lower end to remove the wire connector as Shown.

Supplemental Instructions

Changing Existing Downrod to Longer Downrod (sold separately)

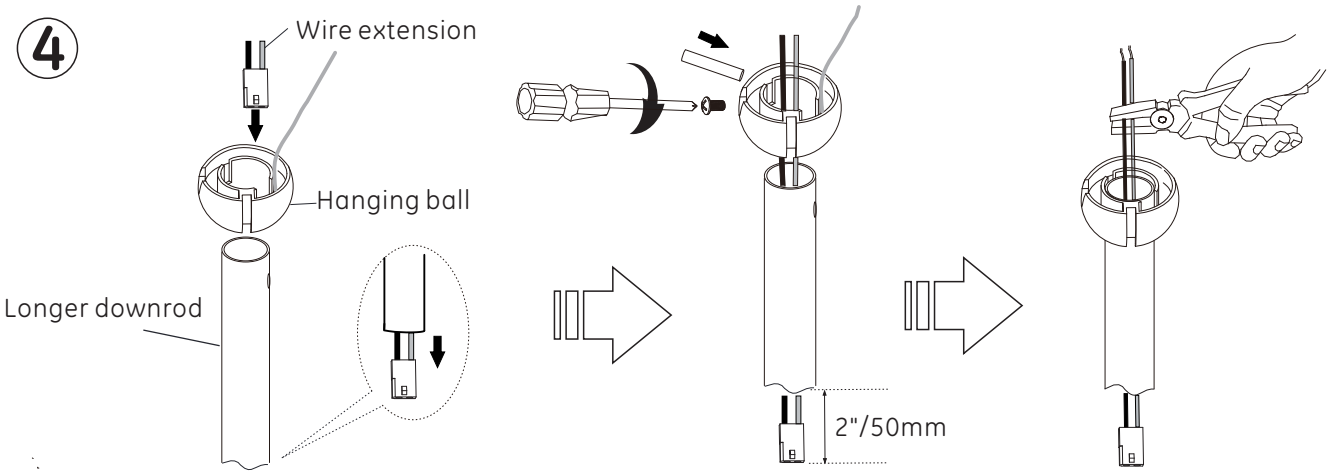

Feed the new longer wire extension (provided with the fan) into the hanging ball and the longer downrod, and extend over downrod about 2 inches (50mm).

Reassemble the hanging ball onto the downrod with the set screw and cross pin previously removed.

Cut the wire extension at lead wire end, according to the length of the downrod, if needed.

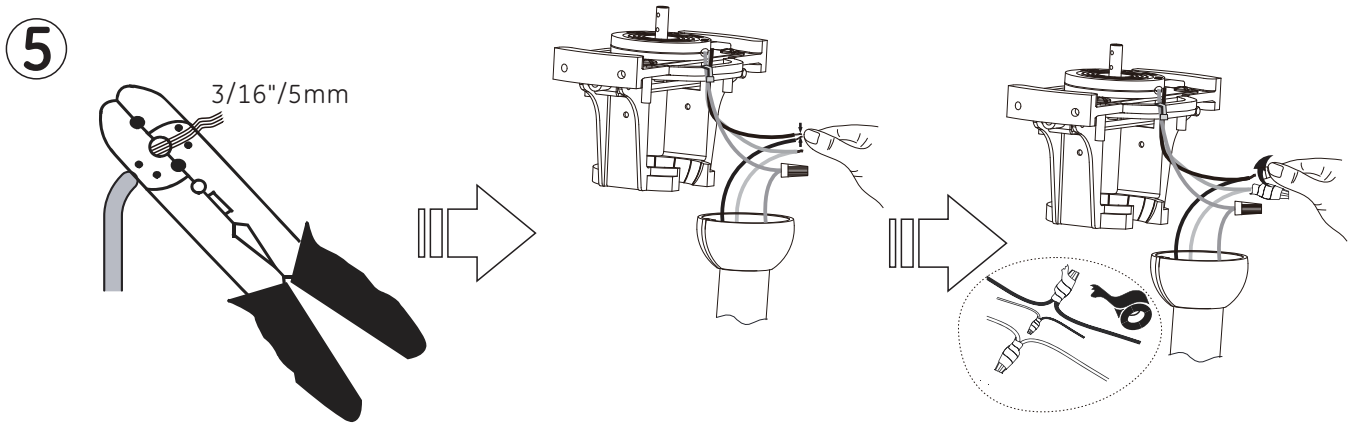

Strip the four wire leads at 3/16 inches (5mm).

Twist the same color wire leads together, white to white, black to black.

Using wire nut and secure with electrical tape.

CAUTION: Risk of electrical shock, make sure there are no conductor or copper wires exposed.

Supplemental Instructions

Changing Existing Downrod to Longer Downrod (sold separately)

6

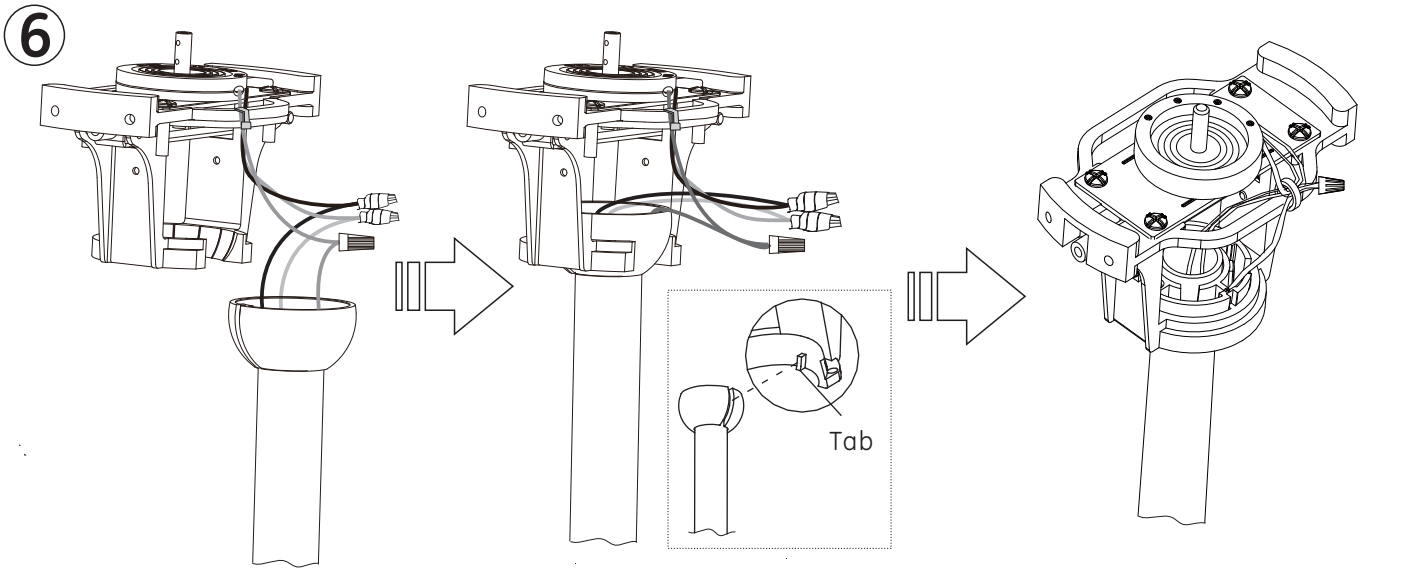

Re-seat the downrod assembly to the mounting bracket, making sure the groove of the ball is properly engaged into the tab of the mounting bracket as shown. Secure the wires with nylon tie as shown.

7

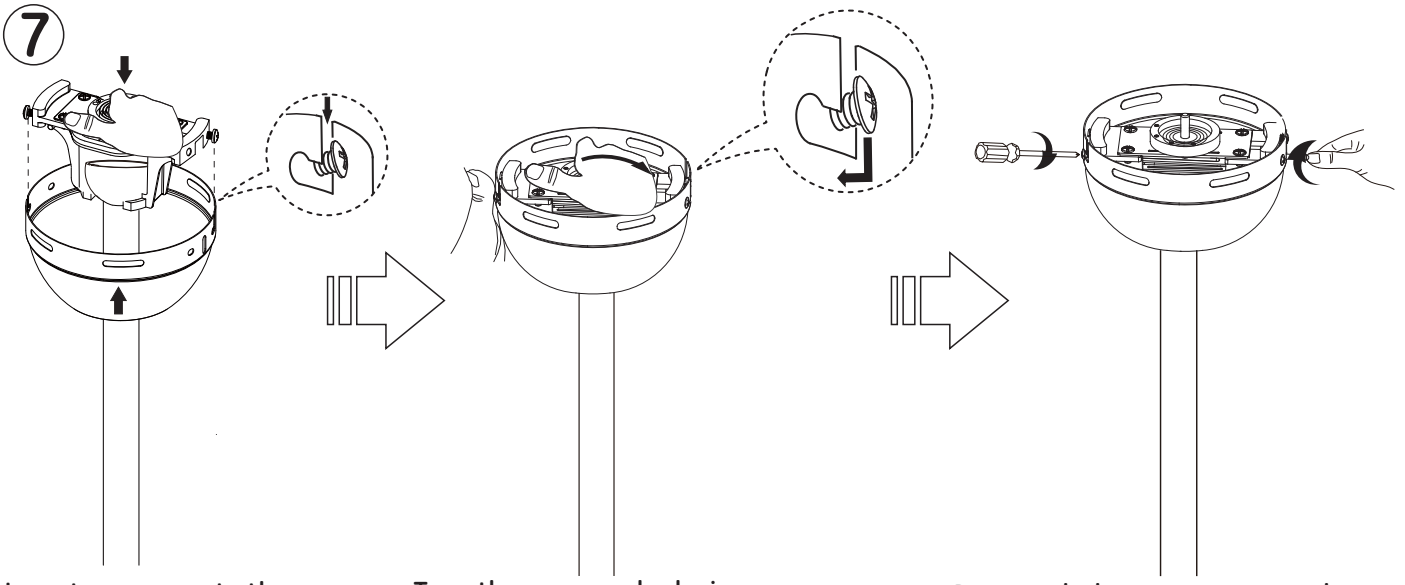

Insert canopy onto the new downrod and bracket assembly.

Turn the canopy clockwise to lock the screws into the L slots.

Re-attach the two screws and the push lever removed on step 2.

Re-attach the longer downrod canopy assembly to the fan, reversing the procedures in step 1 on page 23.

Once completed, follow the steps in the fan instruction manual to complete the fan installation.