User Manual

1.37 m (54 in.)
Adley LED Ceiling Fan
MODEL: 20475 & 20482 & 20628

120V 60Hz, MADE IN CHINA

Customer Assistance
1-866-885-4649

LISTED

POWERED BY SkyPlug™

Contact a qualified electrician or call the Customer Care Service Team at 1-866-885-4649
Customer Service hours of operation are 9:00AM-5:00PM EST -Monday-Friday

Note: Installation videos for GE Branded fans with SkyPlug technology can be viewed and downloaded on www.gelightingandfans.com

NV01-20170623

Safety Rules

READ AND SAVE THESE INSTRUCTIONS

1. To reduce the risk of electric shock, ensure electricity has been turned off at the circuit breaker or fuse box before beginning.

2. All electrical connections must be made in accordance with local codes, ordinances and/or the National Electric Code. Electrical installation should be performed by a qualified licensed electrician.

3. WARNING: to reduce the risk of electrical shock or fire, do not use this fan with any solid-state fan speed control device. It will permanently damage the electronic circuitry.

4. CAUTION: To reduce the risk of personal injury, use only the screws provided with the outlet box.

5. The weight of the fan is 10.69 kg (23.52 lb). The outlet box and support structure must be securely mounted and capable of reliably supporting a minimum of 15.9 kg (35 lb.). Use only UL Listed outlet boxes marked "FOR FAN SUPPORT."

6. The fan must be mounted with a minimum of 2.1m (7 ft.) clearance from the trailing edge of the blades to the floor.

7. Avoid placing objects in the path of the blades.

8. To avoid personal injury or damage to the fan and other items, be cautious when working around or cleaning the fan.

9. Do not use water or detergents when cleaning the fan or fan blades. A dry dust cloth or lightly damped cloth will be suitable for cleaning.

10. After making electrical connections, spliced conductors should be turned upward and pushed carefully up into the outlet box. The wires should be spread apart with the grounded conductor and the equipment-grounding conductor on one side of the outlet box and ungrounded conductor on the other side of the outlet box.

11. All screws must be checked and re-tightened where necessary during installation.

12. This fan is suitable for room sizes up to 225 square feet (20.9 square meters).

WARNING: To reduce the risk of personal injury, do not bend the blade arms (also referred to as flanges), when installing the brackets, balancing the blades or cleaning the fan. Do not insert foreign objects in-between rotating fan blades.

WARNING: To reduce the risk of fire, electric shock or personal injury, mount to outlet box marked "acceptable for fan support of 15.9 kg (35 lb.) or less" and use mounting screws provided with the outlet box. Most outlet boxes commonly used for the support of light fixtures are not acceptable for fan support and may need to be replaced. Due to the complexity of the installation of this fan, a qualified licensed electrician is strongly recommended.

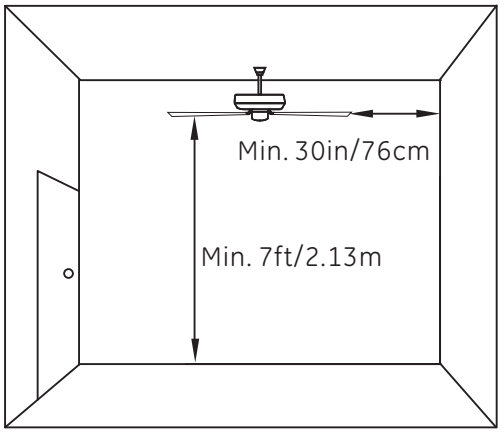

Basic Guidelines For Working With Electricity

SAFETY TIPS

1. Before working on a circuit, go to the main service panel and remove the fuse or turn off the breaker that controls that circuit.

2. Tape a sign to the panel warning others to leave the circuit alone while you work.

3. Before touching any wire, use a voltage tester to make sure it's not live.

4. Whenever you check for voltage in a receptacle, check both outlets; each may be controlled by a separate wiring circuit.

5. When replacing fuses, turn off the main power first. Make sure your hands and feet are dry, and place one hand behind your back to prevent electricity from making a complete circuit through your chest. Touch a plug fuse only by its insulated rim.

6. Remove cartridge fuses with fuse puller.

7. Use tools with insulated handles and ladders made of wood or fiberglass.

8. To protect children, place safety cover over any unused outlets.

9. Vaulted ceiling angle is not to exceed 11 degrees.

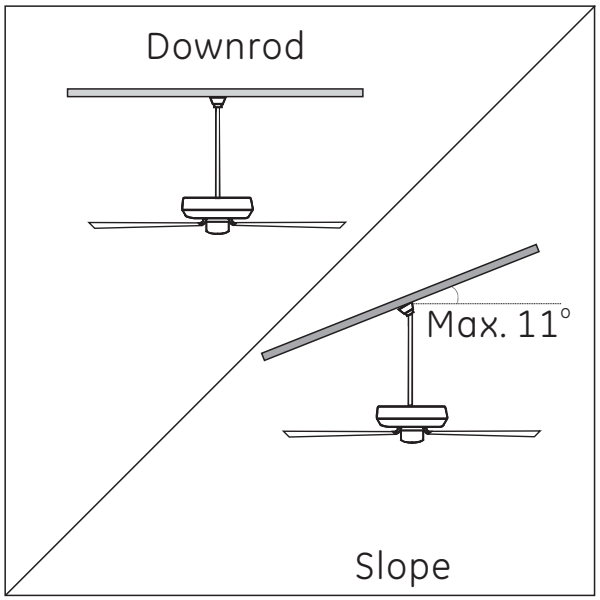

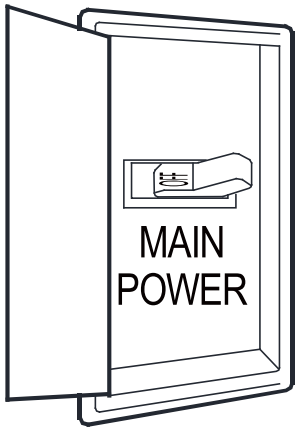

Shut off main power at the circuit breaker or fuse panel before removing old fixture.

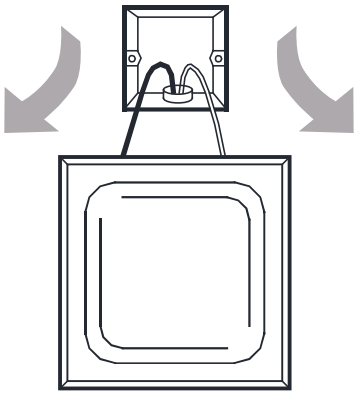

Remove old fixture. Disconnect wire.

Tools Needed (Not Supplied)

Required

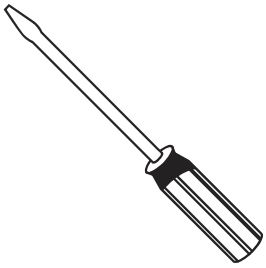

Flathead Screwdriver (1# screwhead recommended)

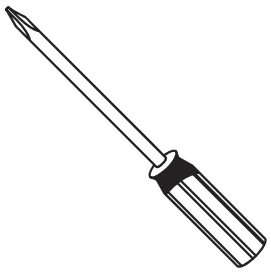

Philips Screwdriver

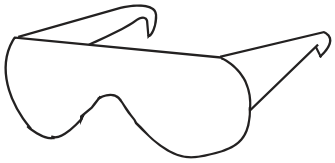

Safety Glasses

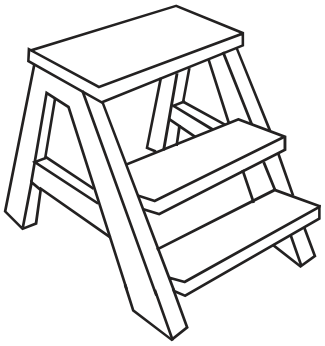

Step Ladder

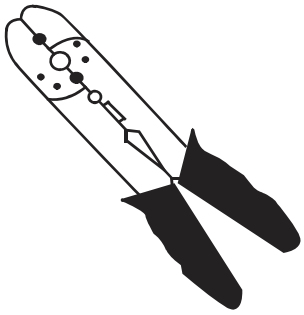

Wire Stripper

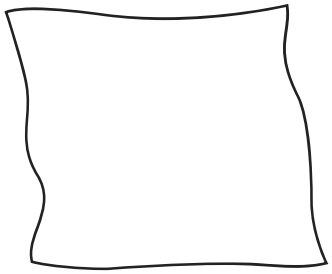

Soft Cloth

Hardware Included

Carefully unpack and identify each part to make sure you have everything ready for installation. Lay out each part on a clean area such as a table or floor. Check to make sure you have the following:

Hardware Bag

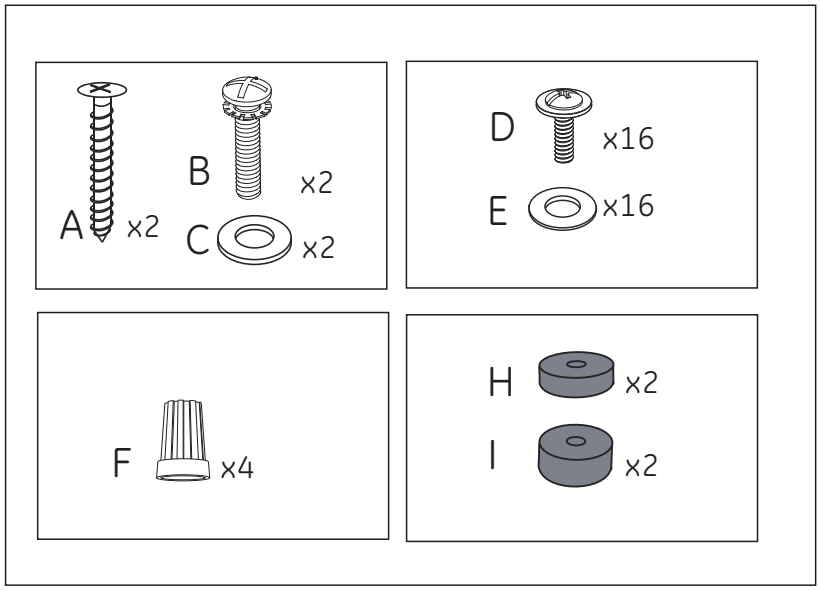

Blade Balancing Kit

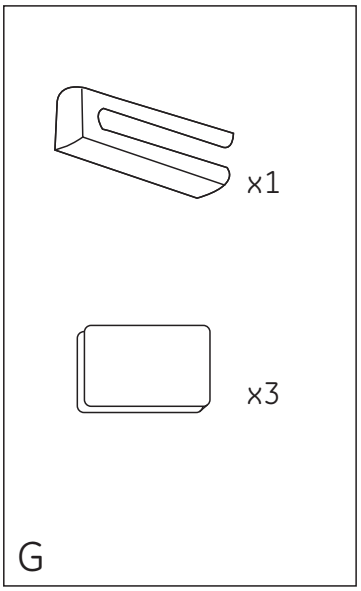

Remote Control

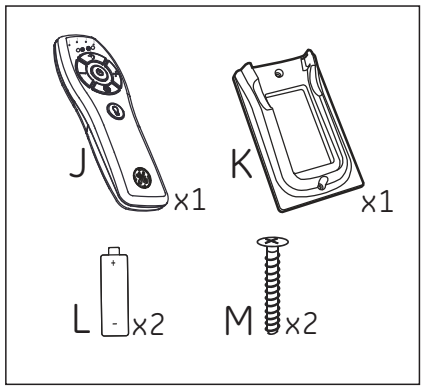

Package Contents

Carefully unpack and identify each part to make sure you have everything ready for installation. Lay out each part on a clean area such as a table or floor. Check to make sure you have the following:

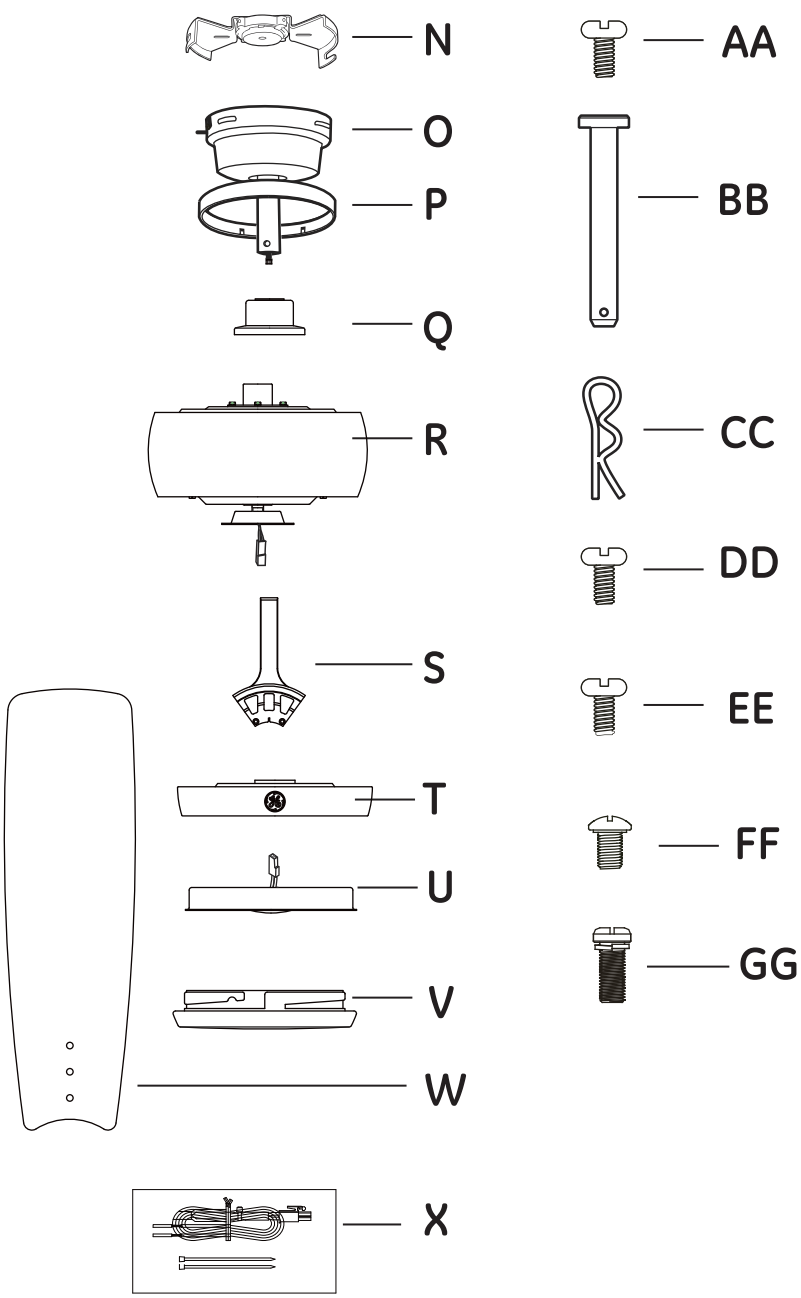

PART	DESCRIPTION	QUANTITY
N	SkyReceptacle	1
O	Canopy Assembly	1
P	Canopy Trim Ring	1
Q	Coupling Cover	1
R	Fan Motor Assembly	1
S	Blade Holder	5
T	Light Kit Pan	1
U	LED Light Kit	1
V	Glass Shade	1
W	Set of Blades	5
X	Wire extension Keep this for longer downrod (option sold separately) installation. See instruction page 23.	1
AA	Collar Set Screw (Preassembled to coupling of motor assembly)	2
BB	Clevis Pin (Preassembled to coupling of downrod assembly)	1
CC	Cotter Pin (Preassembled to coupling of downrod assembly)	1
DD	Light Kit Pan Mounting Screw (Preassembled to mounting plate of motor assembly)	3
EE	Light Kit Mounting Screw (Preassembled to coupling of motor assembly)	3
FF	Canopy Mounting Screw (Preassembled to canopy assembly)	4
GG	Blade Holder Screw with Spring Washer (Preassembled to motor assembly)	10

Fan Installation Drawing

Review important safety instructions before installation.

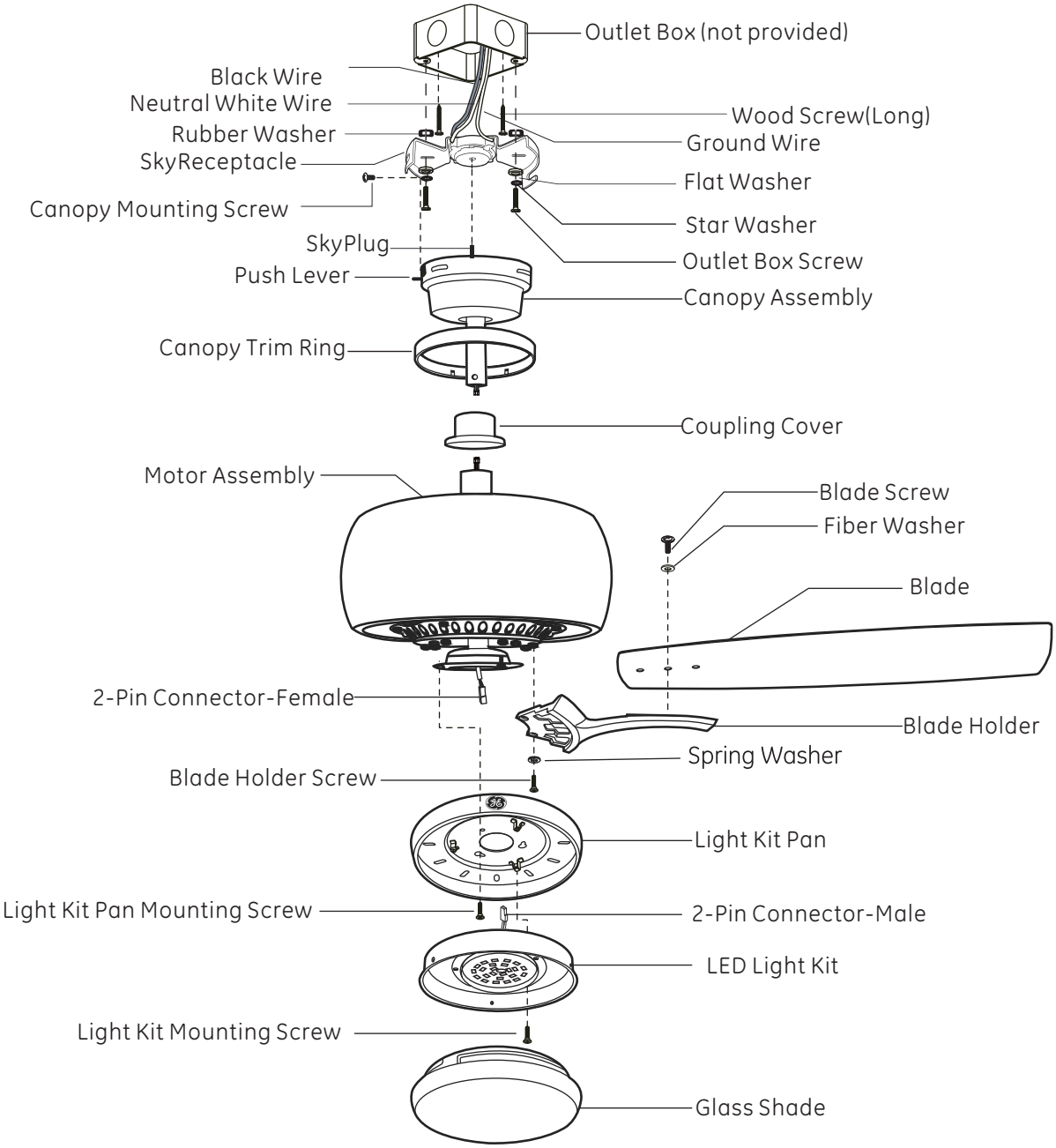

SkyReceptacle Typical Wire Configurations

TYPICAL WIRE CONFIGURATIONS:

IMPORTANT: For remote control fans, L1 is the only active live /hot terminal. The hot/live wire from house supply must be inserted into L1 terminal for the fan to operate.

WIRING DIAGRAM #1: Typical Wiring Configuration for 1 Wall Switch

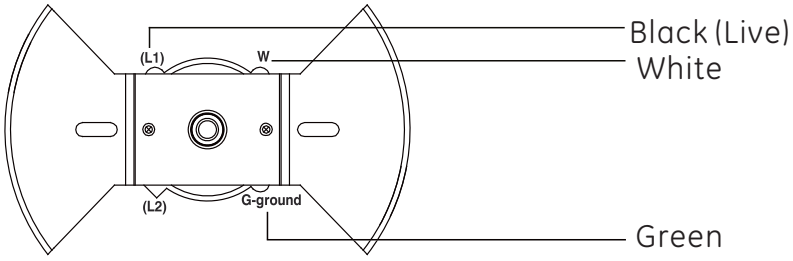

WIRING DIAGRAM #2: Typical Wiring Configuration for 2 Wall Switches

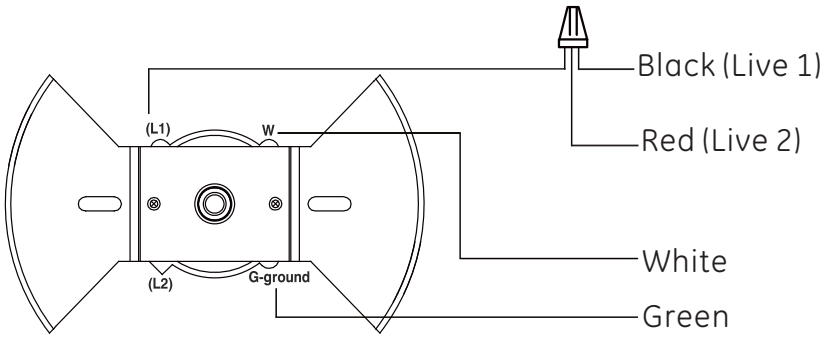

WIRING DIAGRAM #3: Wiring Configuration with more than 1 of the same colored wires in the outlet box

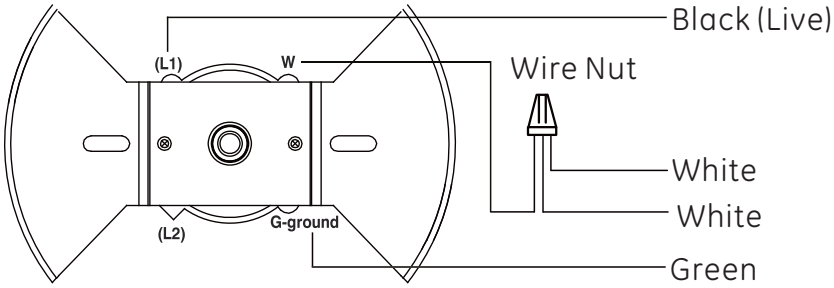

NOTE: If you do not have standard wiring configurations and have questions about the wiring in your outlet box, please contact a qualified electrician, or call customer service 1-866-885-4649.

NOTE: If you have multiple wires connected together, add a jumper lead and insert jumper lead into terminal. Only one single wire can be inserted into terminal.

View Installation Video@ www.gelightingandfans.com

SkyReceptacle Installation

Fig 1.

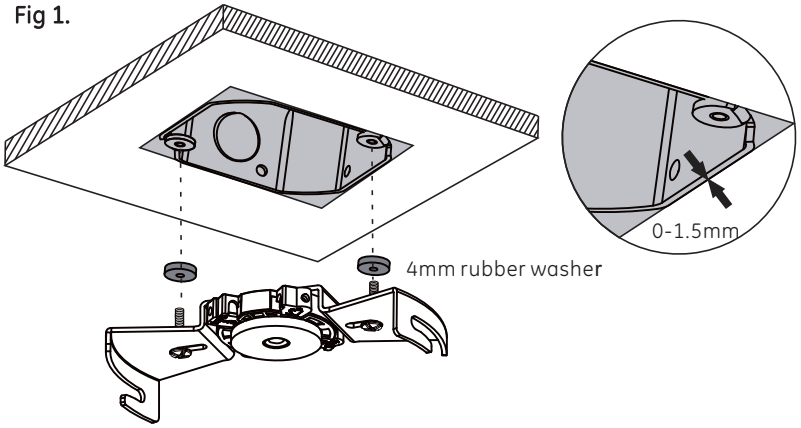

0-1.5mm Gap

Fig 2.

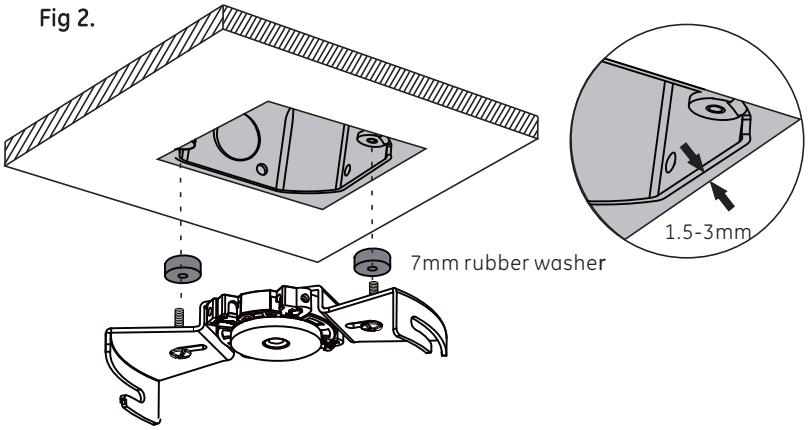

1.5-3mm Gap

Fig 3.

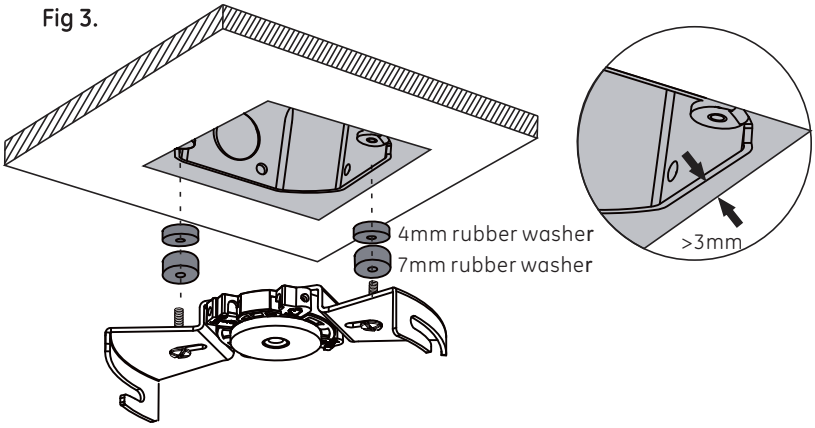

>3mm Gap

Important: Install SkyReceptacle with rubber washers to avoid a gap or uneven surface, and to ensure proper placement of receptacle on the ceiling.

SkyReceptacle Installation

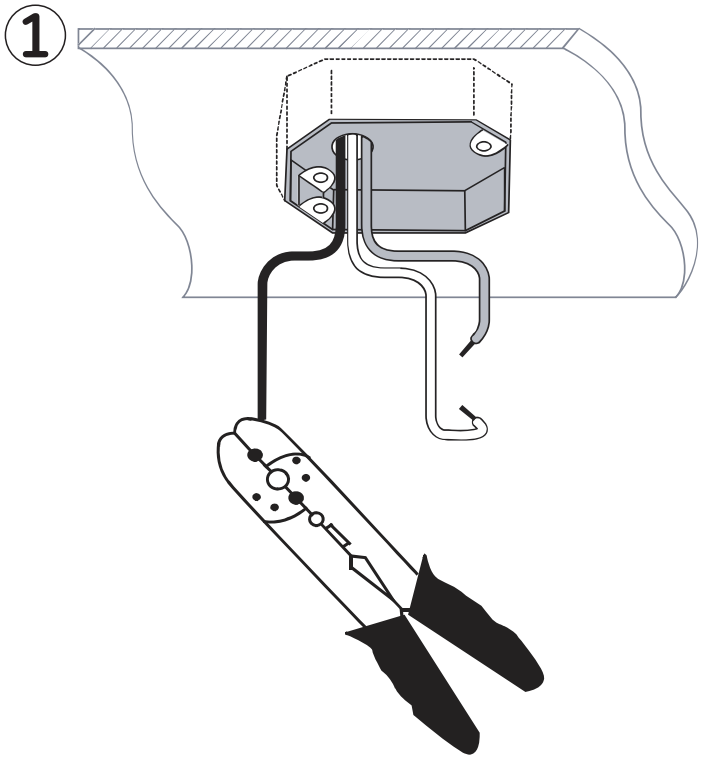

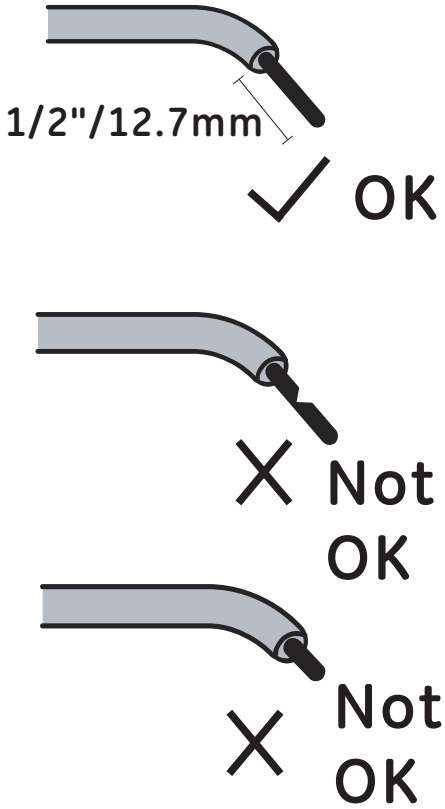

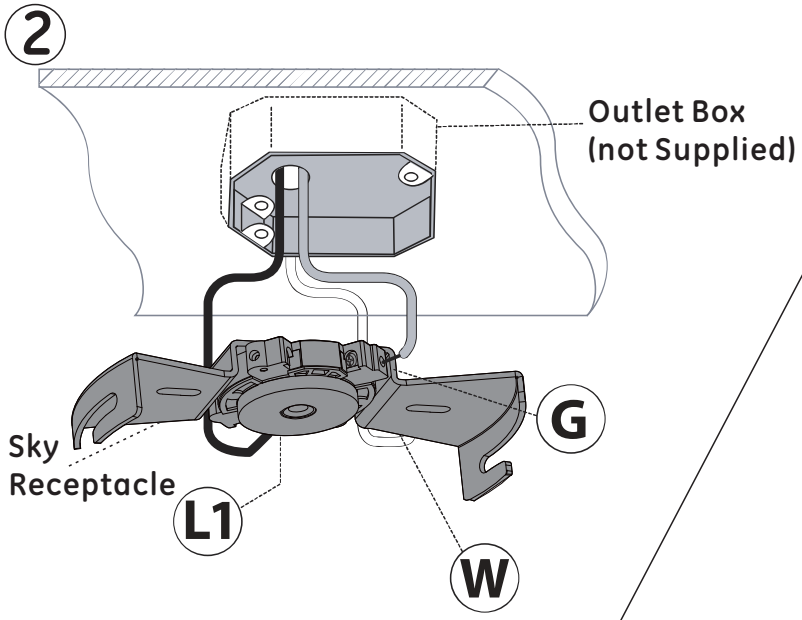

Insert wires into terminal, tighten screw to secure wires.

Terminal's Bottom view on Sky Receptacle

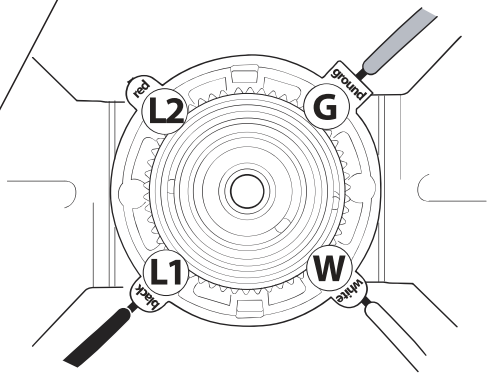

SkyReceptacle Installation

③

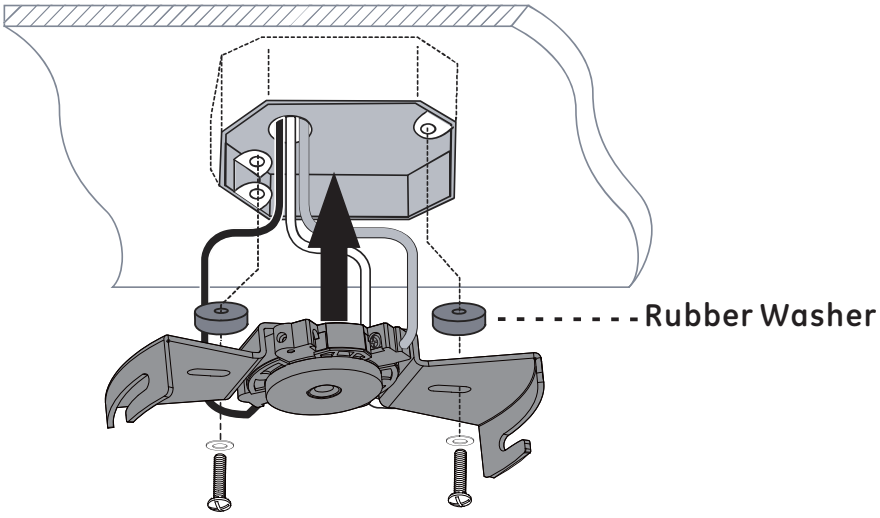

Using the rubber washer when installing receptacle ensures proper placement of the receptacle on the ceiling. We recommend using the rubber washer in all installations.

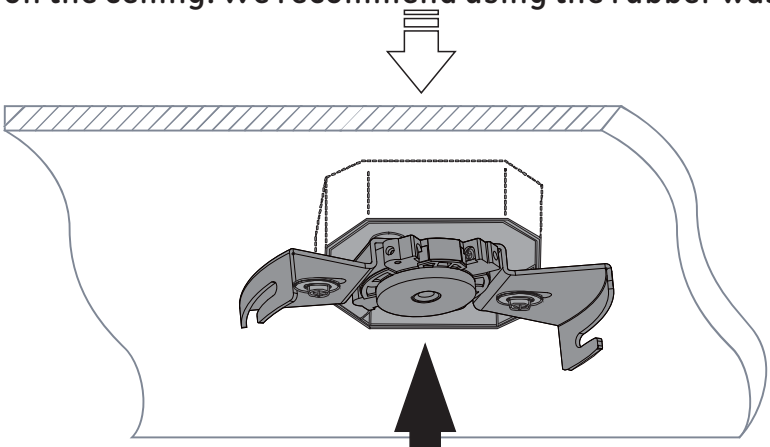

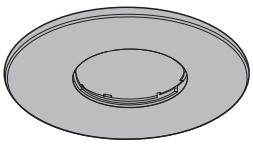

Install cover plate if supplied (not provided on all models)

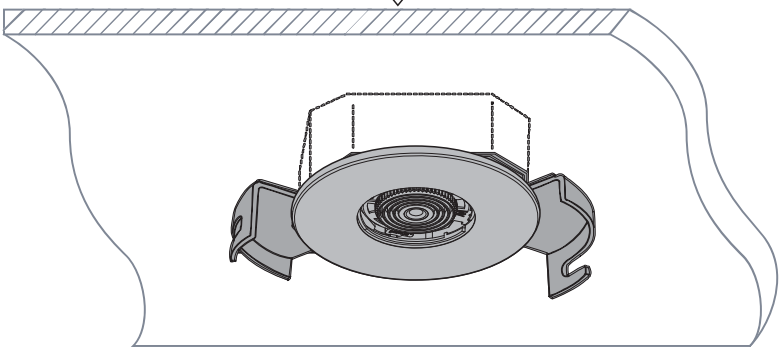

Fan Installation

④

For longer downrod installation, see supplemental Instructions.

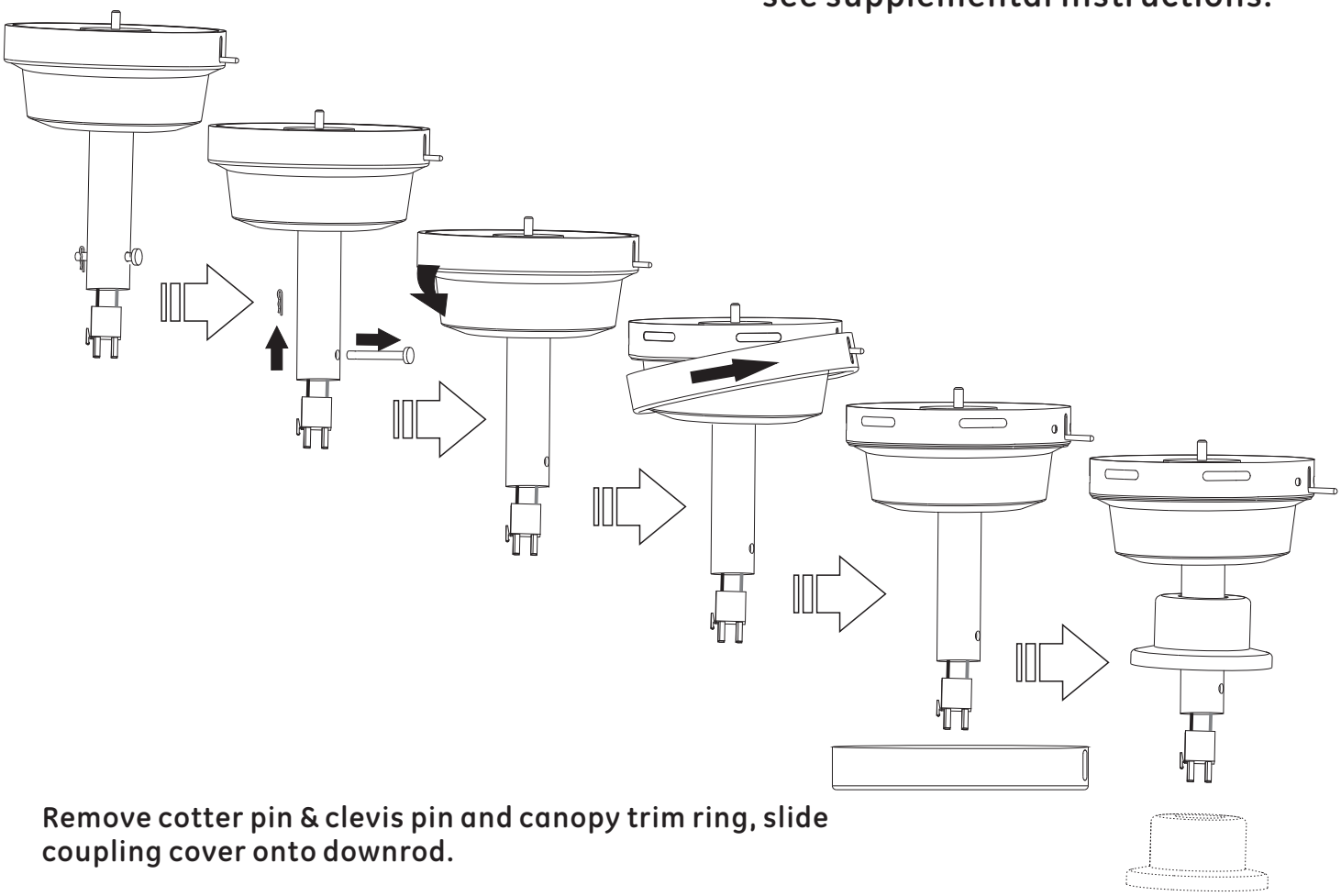

Remove cotter pin & clevis pin and canopy trim ring, slide coupling cover onto downrod.

⑤

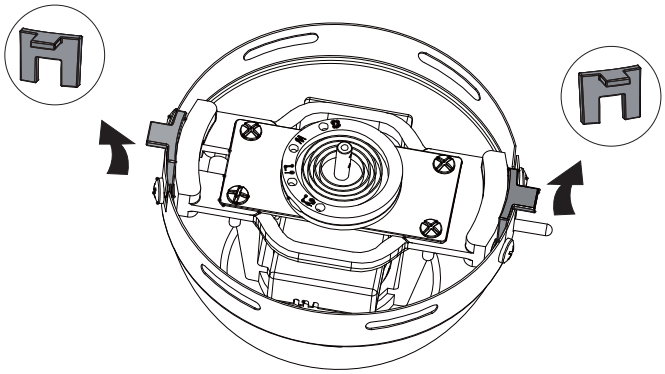

Remove rubber inserts from canopy and discard.

Fan Installation

6

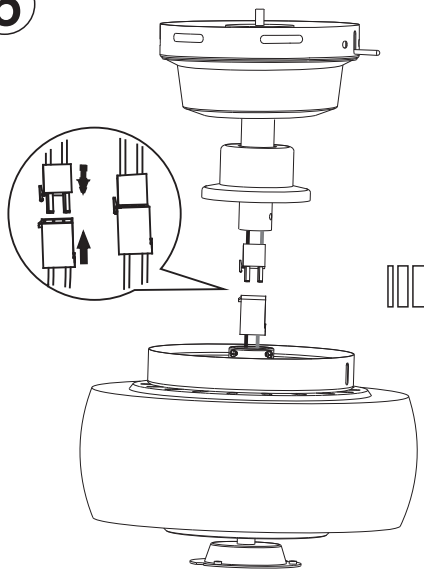

Place canopy trim ring onto the motor housing and connect the connectors.

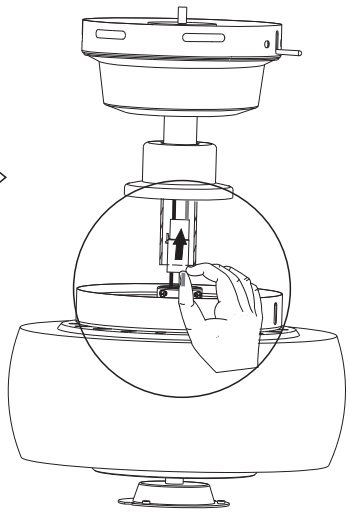

Push up the connector into the downrod.

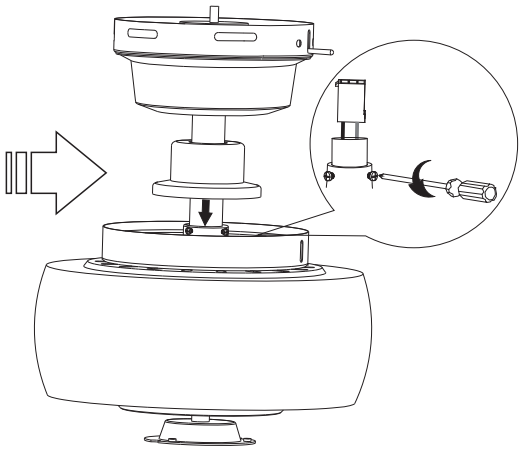

Loosen but not remove 2 screws on adaptor. Insert the downrod into the adaptor.

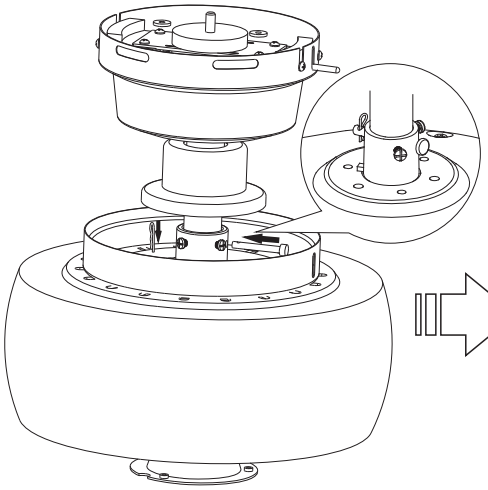

Insert the cotter pin and clevis pin.

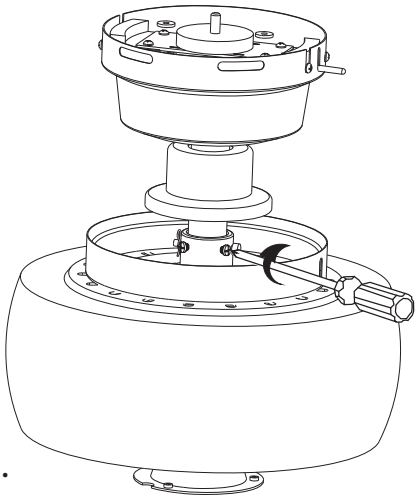

Tighten the 2 screws.

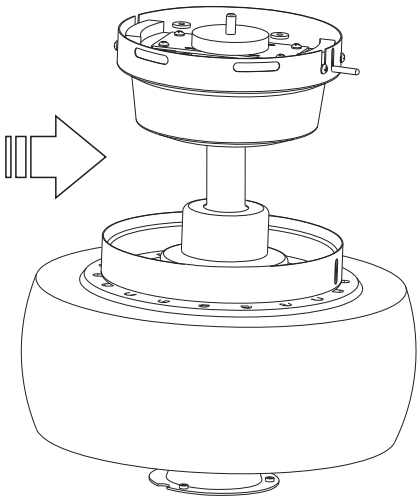

WARNING: Failure to properly install cotter pin could result in fan loosening and possibly falling.

Fan Installation

7

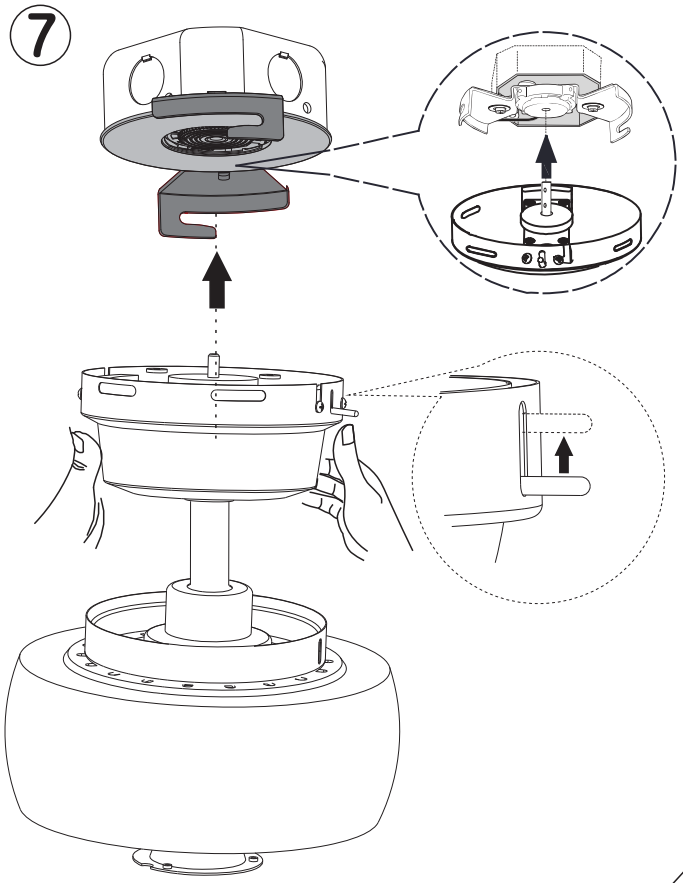

Press up on the push lever while lifting the fan. For correct alignment, make sure the bracket with plug and push lever is placed between the receptacle bracket metal slots
(in a "+" formation) as shown.

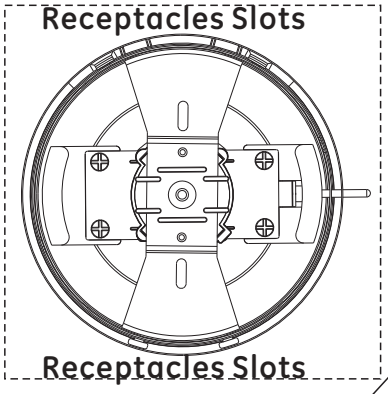

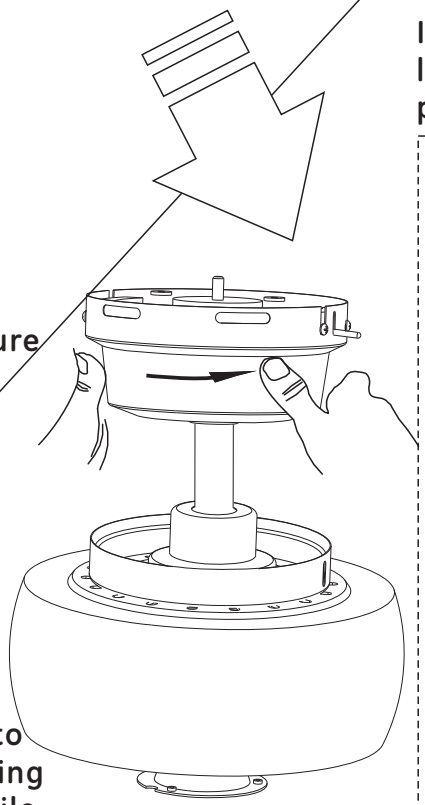

Insert the plug into the receptacle, keeping the lever pushed up while turning fan to the right.
Let go of the push lever and make sure plug is fully inserted into receptacle. Continue to support fan until locked into position.

Initial "+" formation while lifting fan and inserting plug into receptacle

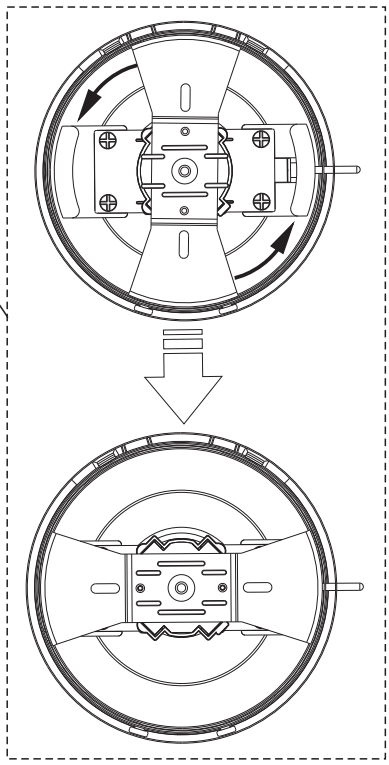

Final formation after turning fan

Fan Installation

8

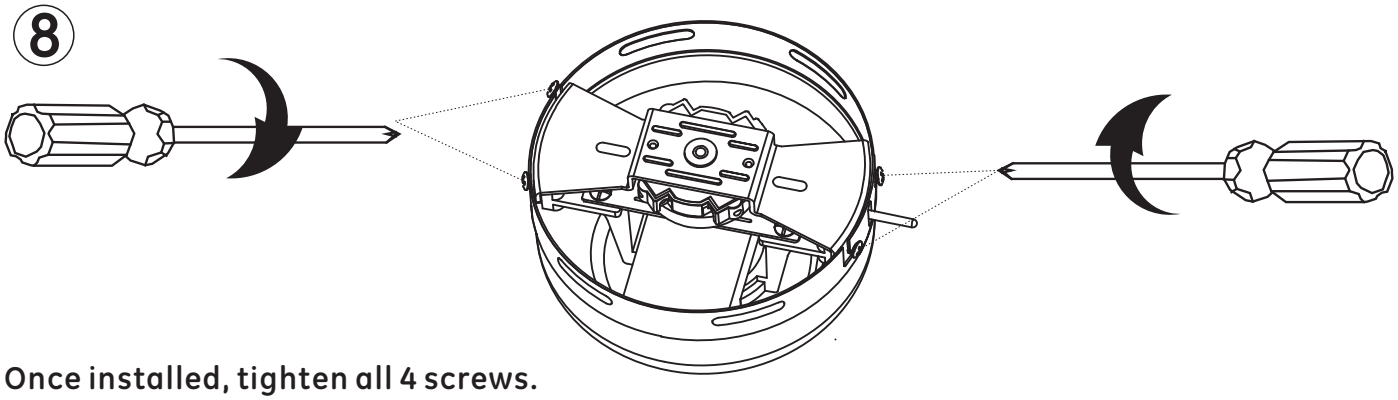

Once installed, tighten all 4 screws.

9

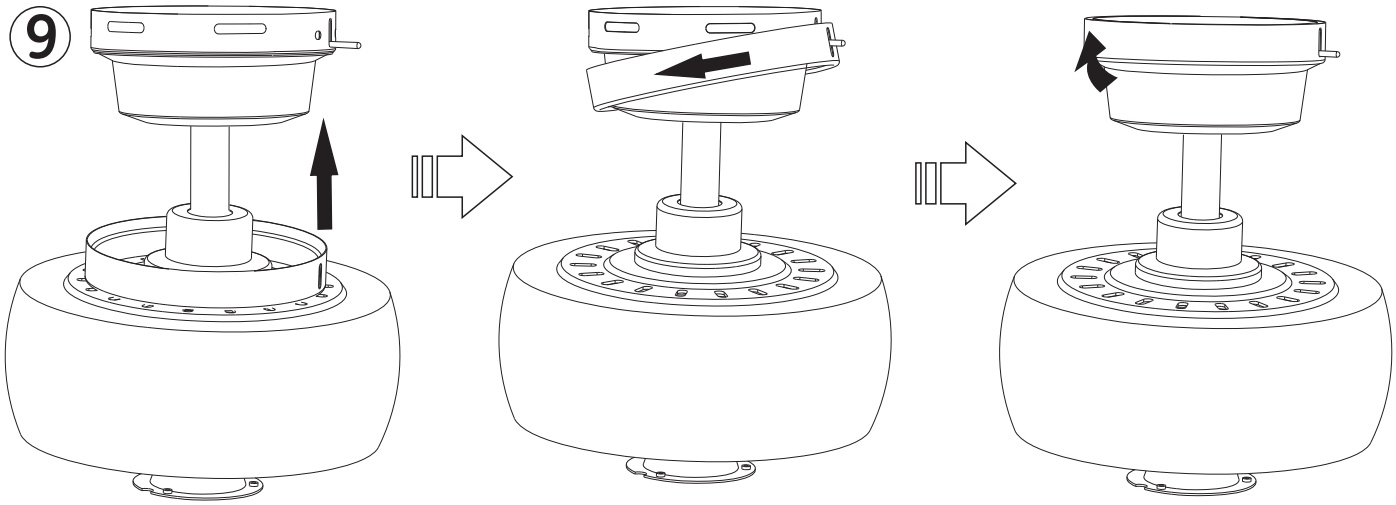

Reinstall trim ring, being careful not to depress the push lever.

10

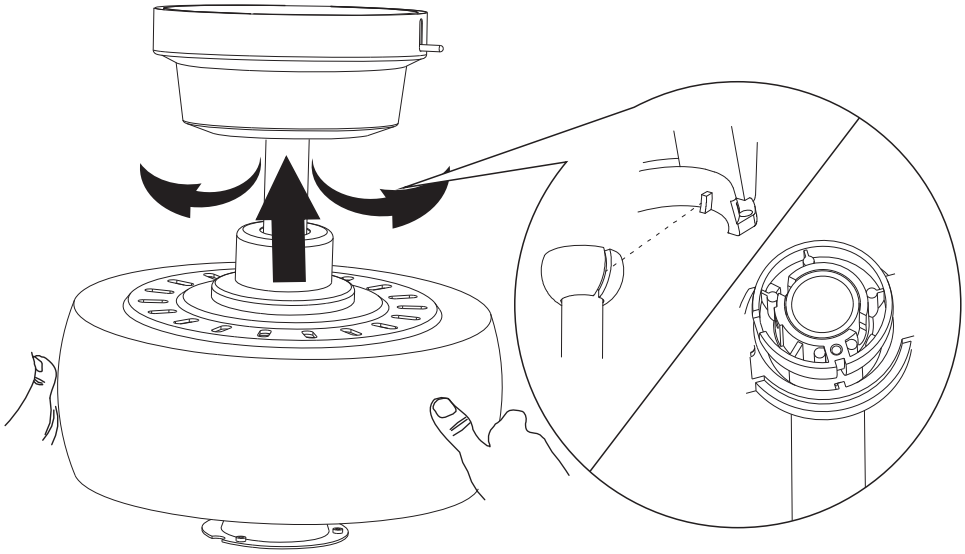

Adjust fan housing so ball is properly seated in bracket.

Fan Installation

11

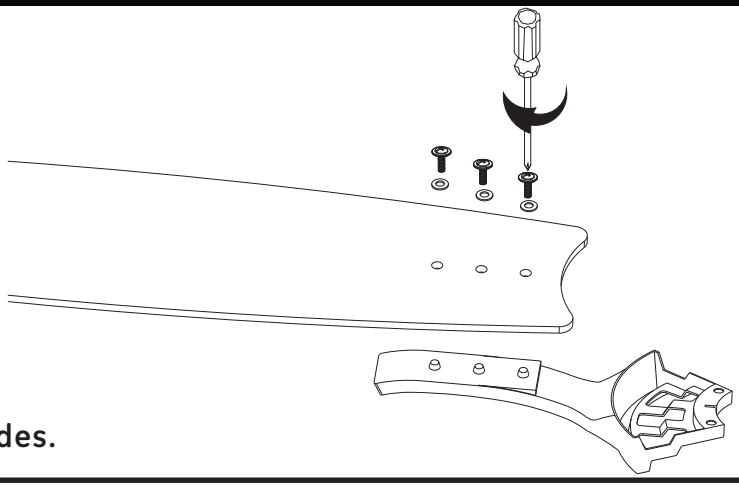

Install fan blades.

12

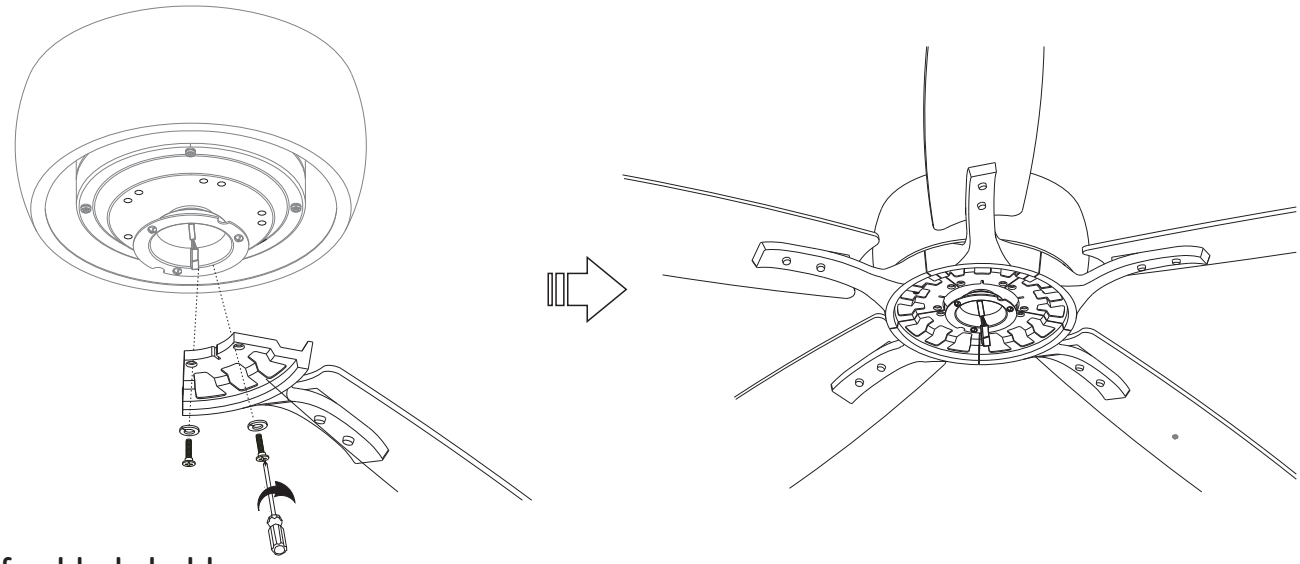

Install fan blade holders.

13

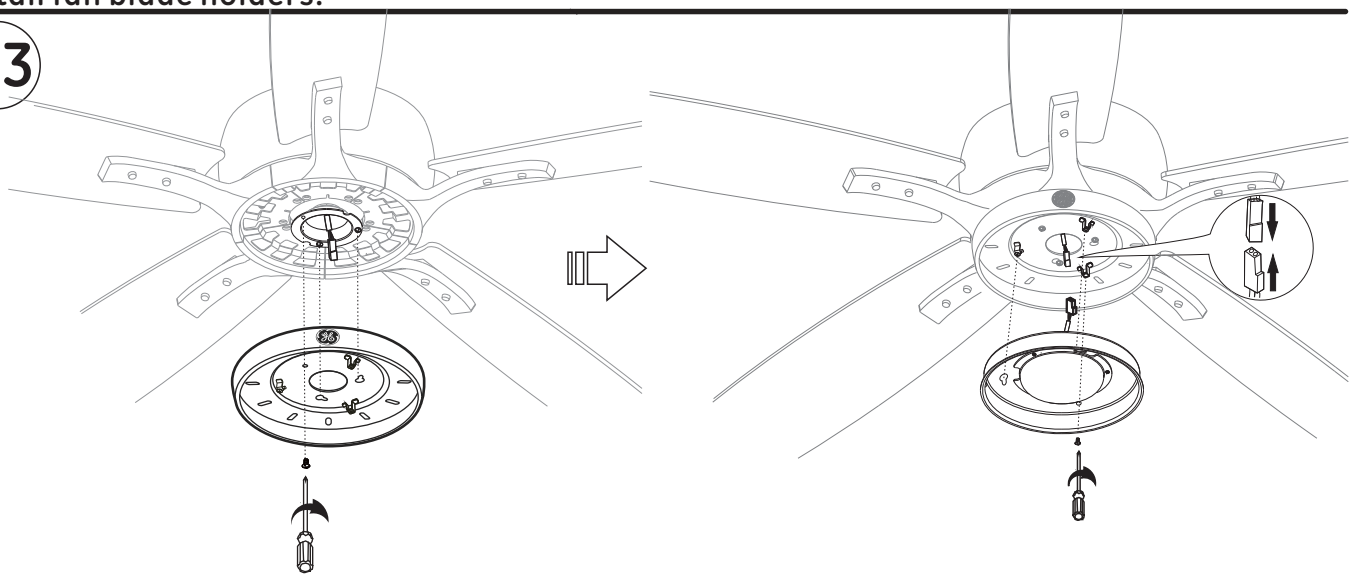

Install light kit pan.

Install LED Light kit.

Fan Installation

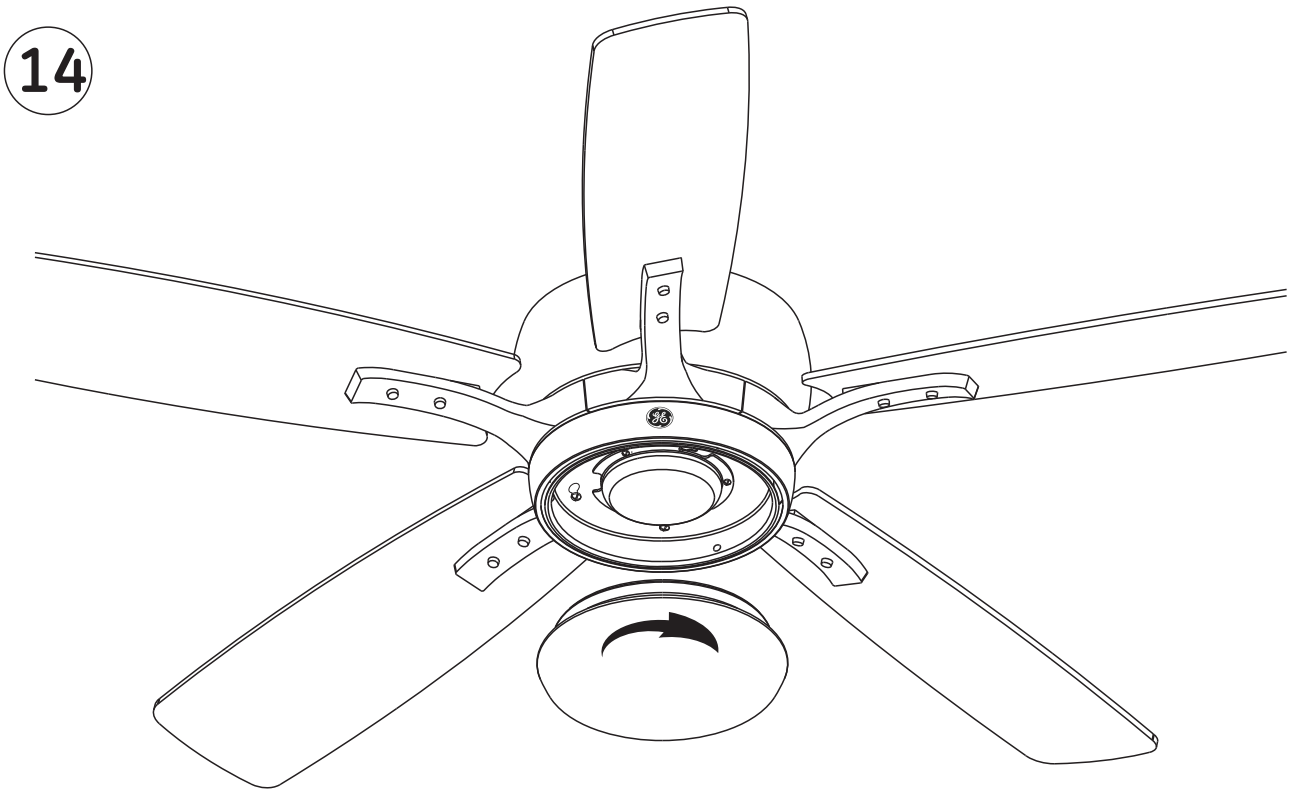

Install shade-turn to secure.

Remote Control

REMOTE CONTROL OPERATIONS

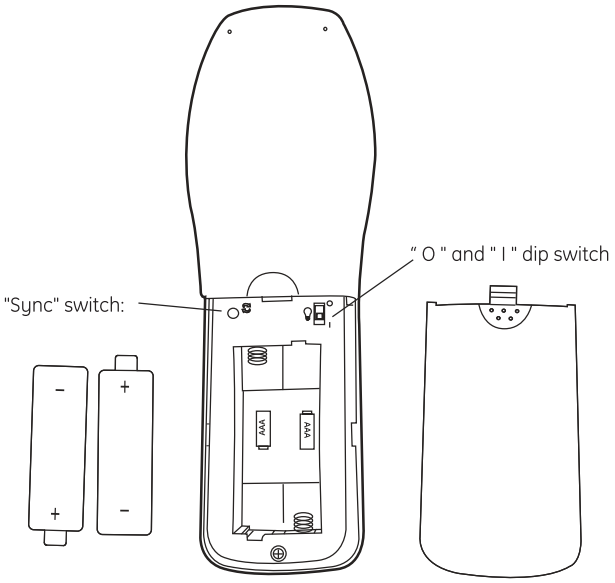

IMPORTANT: If the remote control is not operating correctly, please follow the steps on page 19 for pairing. Use the corner of the battery cover to press the "Sync" switch for syncing function.

Step 1. Restore power at circuit breaker and turn the wall switch to the "ON" position (if using wall switch) to test for proper operation.

Step 2. Open the battery compartment cover, and install two 1.5-volt AAA batteries provided in the remote control bag. Ensure the batteries are installed correctly with regard to polarity (+ and -).

Step 3. Check " O " and " I " dip switch: For this fan the dip switch should be in the "I" position, allowing for dimming of the light. Place the switch in the "0" position to turn the dimming feature off if you do not want the dimming feature.

Step 4. Close the battery compartment cover and see below diagram for the function of each button on the transmitter.

Step 5. Select a location to install the transmitter holder, mount the transmitter holder using the wood screws provided.

Note: This Fan and Remote has a dimming function for the light. You can control the brightness of the light with the "💡" button on the hand held remote. Please see below for Remote Functions.

REMOTE FUNCTIONS

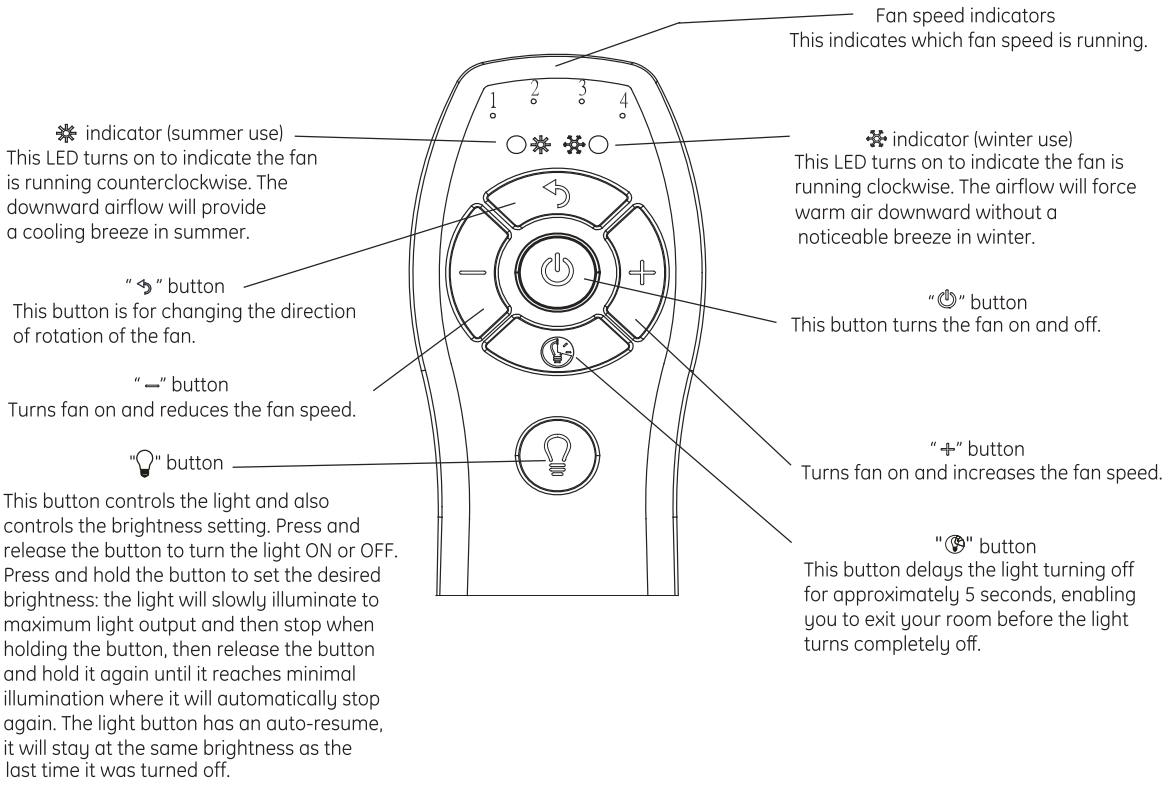

Remote Control

NOTE:
-To prevent damage to transmitter, remove the batteries if not used for long periods.
-Replace batteries as a simultaneous set-always replace the whole set of batteries at one time, taking care not to mix old and new ones, or batteries of different types.
-Please contact your local batteries recycling center for proper battery disposal information.

FCC ID: 2AAZPFAN61T4SP / I C : 11037A-FAN61T4SP

This device complies with part 15 of the FCC Rules and RSS-210 Issue 8. Operation is subject to the following two conditions:
1. This device may not cause harmful interference
2. This device must accept any interference received, including interference that may cause undesired operation.

CAUTION: Any changes or modifications not expressly approved by the party responsible for compliance could void the user's authority to operate the equipment.

NOTE: This equipment has been tested and found to comply with the limits for a Class B digital device pursuant to part 15 of the FCC Rules and the limits pursuant to RSS-210 Issue 8.

These limits are designed to provide reasonable protection against harmful interference in a residential installation. This equipment generates, uses and can radiate radio frequency energy and, if not installed and used in accordance with the instructions, may cause harmful interference to radio communications. However, there is no guarantee that interference will not occur in a particular installation. If this equipment does cause harmful interference to radio or television reception, which can be determined by turning the equipment off and on, the user is encouraged to try to correct the interference by one or more of the following measures:
-Reorient or relocate the receiving antenna.
-Increase the separation between the equipment and the receiver.
-Connect the equipment into an outlet on a circuit different from that to which the receiver is connected.
-Consult the dealer or experienced radio /TV technician for help.

Remote Control Pairing Instructions

REMOTE CONTROL PAIRING INSTRUCTIONS:
Important Note : By default, every fan has been pre-programmed at the factory and should be fully functional once installation is completed. There is no need to perform the pairing process.

Make sure all wiring connections have been properly made and are secure.
Make sure batteries are installed correctly in the transmitter.
Make sure batteries have a full charge or replace with new batteries.
Make sure all switches of the power supply to the fan motor are turned on.

Should you find the fan or remote control not working or not fully functional after installation or during use, pairing of the remote control can be done by following the below simple procedures.
Note, however, that there could be other reasons as to why a fan or a remote control is not working:

PROCEDURES FOR PAIRING RECEIVER AND TRANSMITTER:
The remote is not functioning properly, and you want to reset a fan remote control, or
You are replacing the original transmitter or receiver, or
You have multiple ceiling fans of the same model in one location and you wish to be able to control them with one remote.

IF USING ONE REMOTE CONTROL TO CONTROL MULTIPLE FANS
1. Turn OFF the power/isolation switch to ALL fans that you would like to program to the same hand held remote.
2. Remove the battery cover to access the "Sync" switch on the hand held remote.
3. Install two 1.5 V AAA batteries and make sure the polarity of the batteries is correct.
4. Turn on the power/isolation switch to ALL fans.
5. Press the "Sync" switch with the corner of the battery cover (you can also use a small screwdriver or ballpoint pen) to change the frequency settings within 30 seconds after restoring the power. The lights will flash (on/off) 3 times and remain bright, then the pairing process is complete.
6. Try different speed settings on the transmitter to ensure all the fans are now fully functional. If not, repeat the process starting from Step 1 again.

TO RESET INDIVIDUAL REMOTE CONTROL FOR EACH FAN/INSTALLING A NEW RECEIVER
Note: If you have more than one fan of the same model but wish to only perform the pairing on one fan, follow the same steps starting from step 1 to step 6. Make sure to only power ON one fan at a time, and power OFF all the nearby fans to avoid picking up the same signal.

1. Turn OFF the power/isolation switch to the fan.
2. Remove the battery cover to access the "Sync" switch on the hand held remote.
3. Install two 1.5 V AAA batteries and make sure the polarity of the batteries is correct.
4. Turn on the power/isolation switch to the fan.
5. Press the "Sync" switch with the corner of the battery cover (you can also use a small screwdriver or ballpoint pen) to change the frequency settings within 30 seconds after restoring the power. The light will flash (on/off) 3 times and remain bright, then the pairing process is complete.
6. Try different speed settings on the transmitter to ensure the fan is now fully functional. If not, repeat the process starting from Step 1 again.

Blade Wobble Balancing

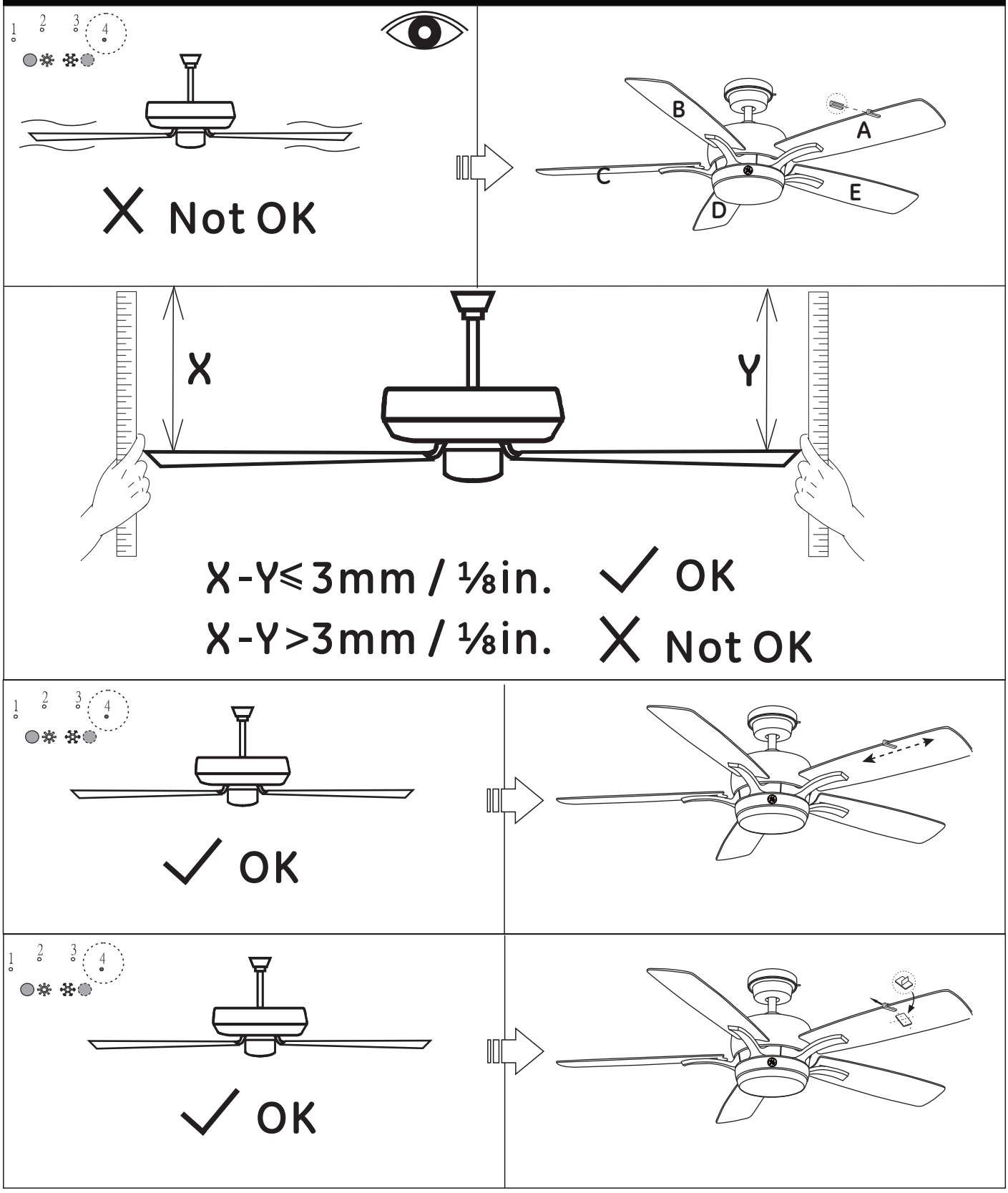

Maintenance

PRODUCT MAINTENANCE

Suggestions to help you maintain your fan

Because of the fan's natural movement, some connections may become loose. Check the support connections, brackets, and blade attachments twice a year. Make sure they are secure. (It is not necessary to remove fan from ceiling).

Cleaning the fan

Clean your fan periodically to help maintain its new appearance over the years. Use only a soft brush or lint-free cloth to avoid scratching the finish. The plating is sealed with a lacquer to minimize discoloration or tarnishing. Do not use water when cleaning. This could damage the motor, the wood, or possibly cause an electrical shock.

There is no need to oil your fan. The motor has permanently lubricated sealed ball bearings.

WARNING: Make sure the power is turned off at the electrical panel box before you attempt any repairs.

NOTE: To avoid personal injury or damage to the fan and other items, be cautious when working around or cleaning the fan.

NOTE: Do not use water or detergents when cleaning the fan or fan blades. A dry dust cloth or lightly damped cloth will be suitable for cleaning.

REMOVE FAN FROM CEILING

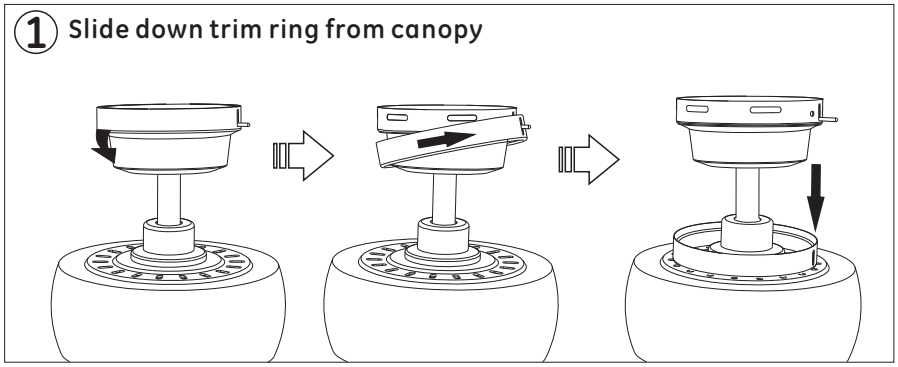

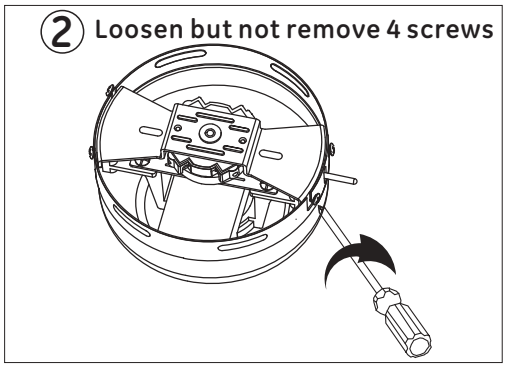

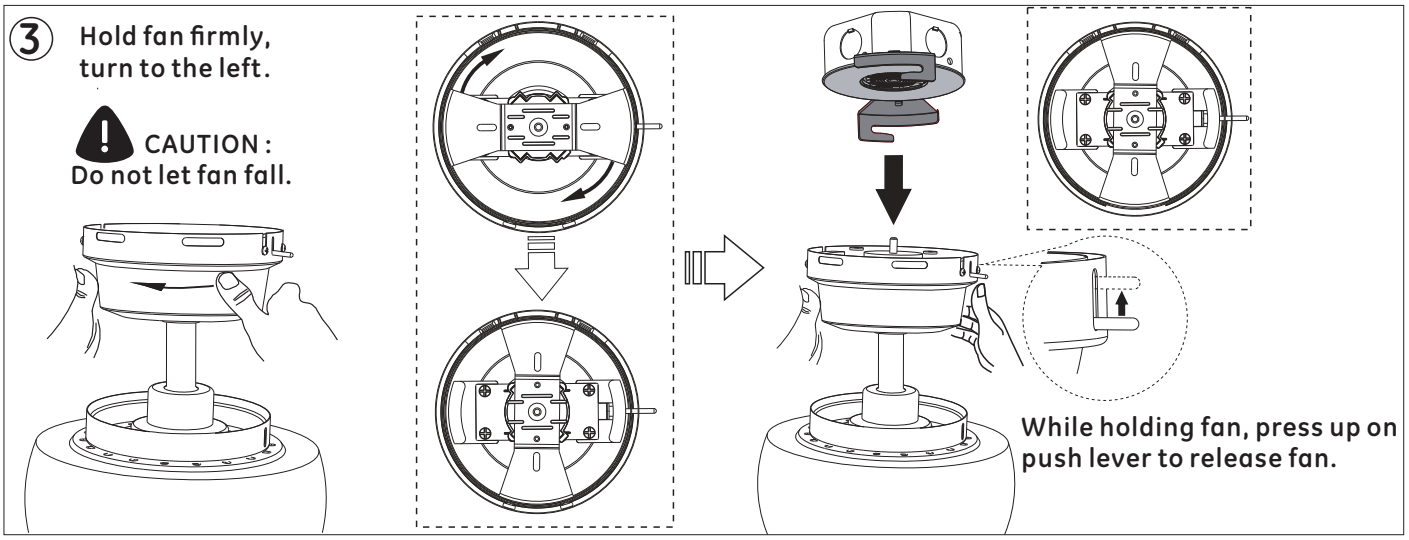

Troubleshooting

CAUTION: Switch off power supply before carrying out any of these checks.

1.SkyPlug will not insert into SkyReceptacle:
-add rubber washers between J-box and SkyReceptacle.
See Page 10 step 3.

2.Fan will not start:
-Check main and branch circuit fuses or breakers.
-Check to make sure the wall switch is in the on position.
-Check remote control operation.

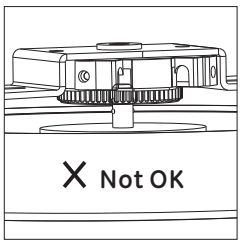

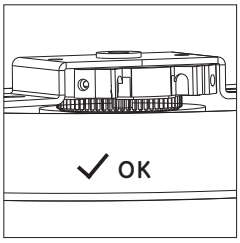

3.Fan will not operate:
- The SkyPlug on the fan canopy should be fully inserted into the receptacle. There are 2 levels of ball bearings on the plug stem. The lower set of ball bearing needs to be fully inserted into the SkyReceptacle.

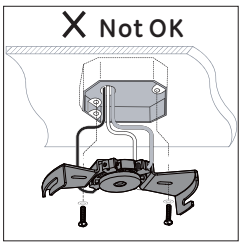

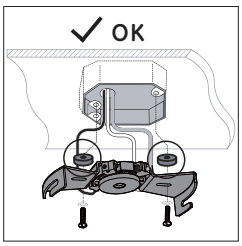

-Ensure the 4mm (or combination of washers) was used when installing the SkyReceptacle on the ceiling. (You may have an uneven outlet box). The SkyPlug must fully insert into the receptacle to make the electrical connection.

-Ensure you inserted the wires correctly into the SkyReceptacle. Black wire into L1,White wire into W, Ground into G.

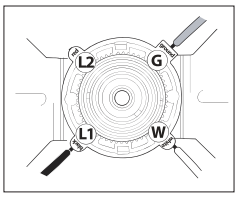

4.Fan sounds noisy:
-Make sure all motor housing screws are snug.
-Make sure the screws that attach the fan blade bracket to the motor hub is tight.
-Make sure wire nut connections are not rattling against each other or the interior wall of the switch housing.
-Allow a 24-hour "breaking-in" period. Most noises associated with a new fan disappear during this time.
-If using a ceiling fan light kit, make sure the screws securing the glassware are tight. Check that the light bulb is also secure.
-Make sure there is a short distance from the ceiling to the canopy. It should not touch the ceiling.
-Make sure your ceiling box is secure and rubber isolator pads are used between mounting bracket and outlet box.

5.The LED will not light:
-Ensure the 2-pin connector is attached/inserted correctly.
-Ensure the power supply is turned on.
-Ensure the circuit breaker is set to "ON" position.

6.Remote control will not work:
-Ensure batteries are new and installed correctly.
-Ensure the dip switches are set correctly.
-Pair the remote control by following the pairing procedure on page 18.

is a trademark of General Electric Company
and is under license by SQL Lighting and Fans, LLC
4400 North Point Parkway, Suite 154, Alpharetta, GA 30022

Supplemental Instructions

Changing Existing Downrod to Longer Downrod (sold separately)

①

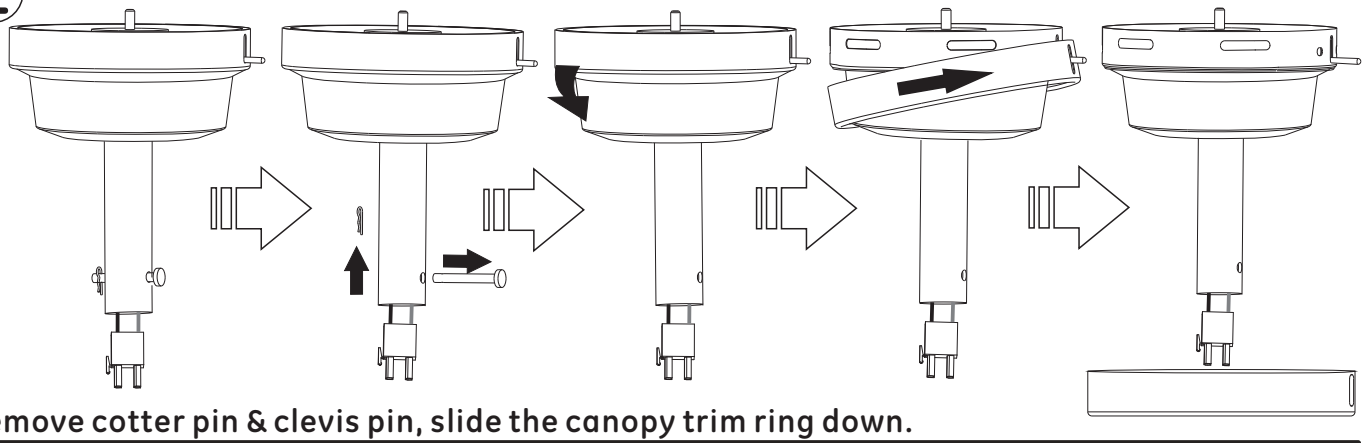

Remove cotter pin & clevis pin, slide the canopy trim ring down.

②

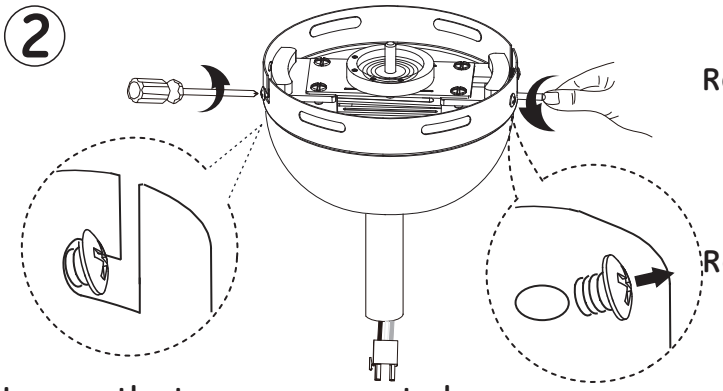

Remove the push lever.

Remove the other two screws.

Loosen the two screws seated in L slot.

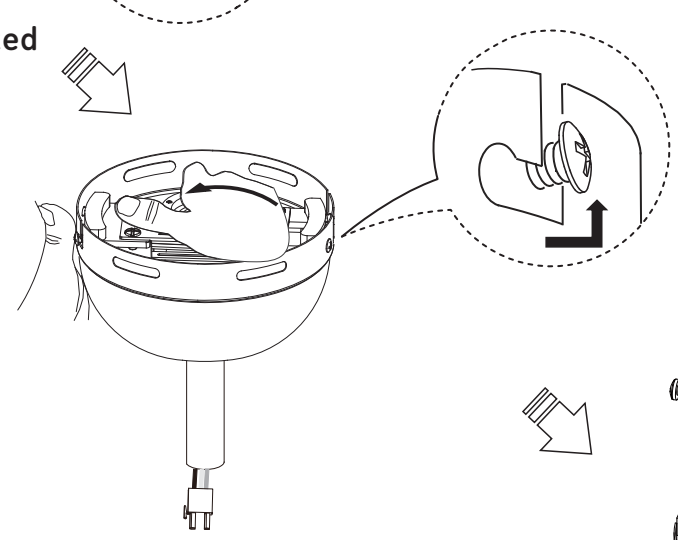

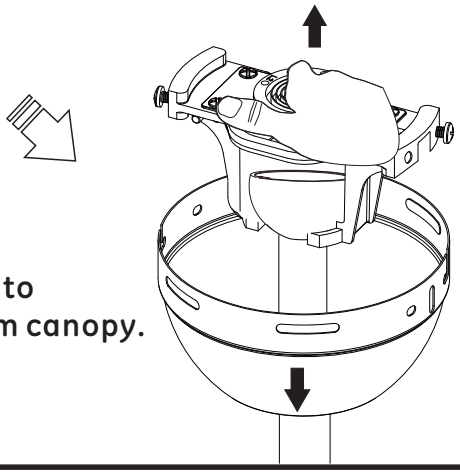

While holding the bracket, turn left to separate bracket with downrod from canopy.

Supplemental Instructions

Changing Existing Downrod to Longer Downrod (sold separately)

③

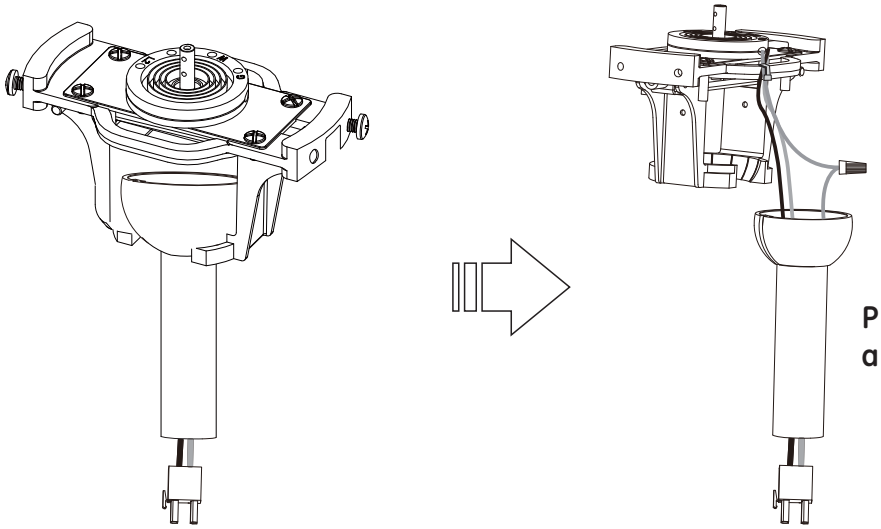

Pull out the downrod assembly from the bracket.

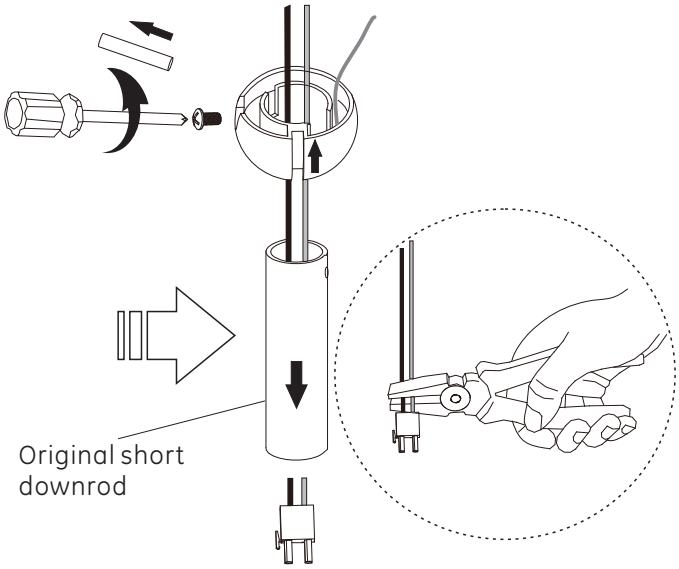

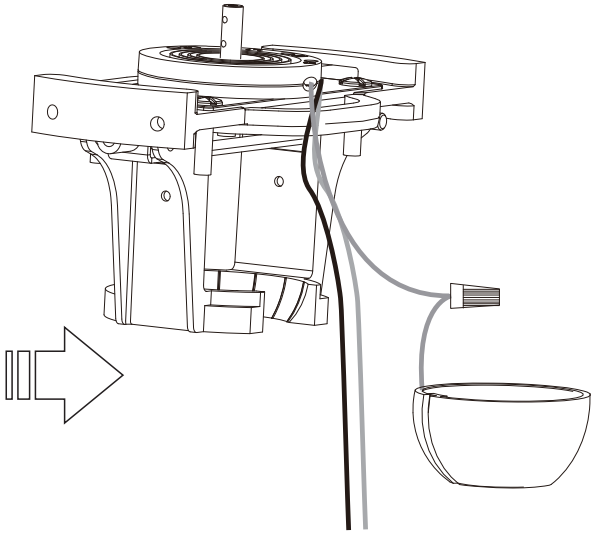

Remove the set screw and cross pin on the hanging ball to detach the original downrod. Cut the wire at lower end to remove the wire connector as shown.

Supplemental Instructions

Changing Existing Downrod to Longer Downrod (sold separately)

④

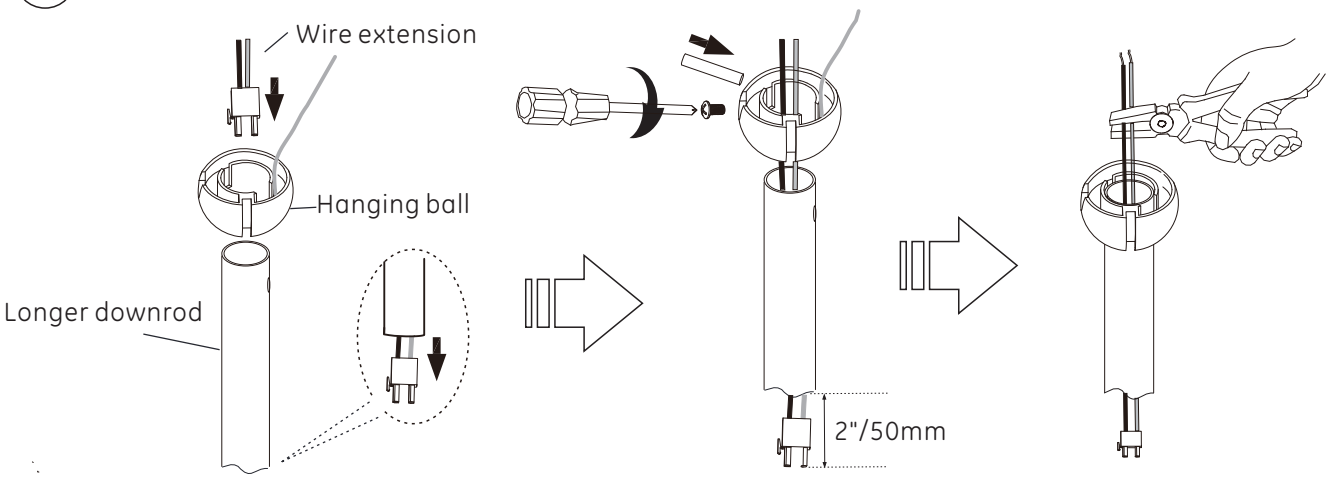

Feed the new longer wire extension (provided with the fan) into the hanging ball and the longer downrod, and extend over downrod about 2 inches (50mm).

Reassemble the hanging ball onto the downrod with the set screw and cross pin previously removed.

Cut the wire extension at lead wire end, according to the length of the downrod, if needed.

⑤

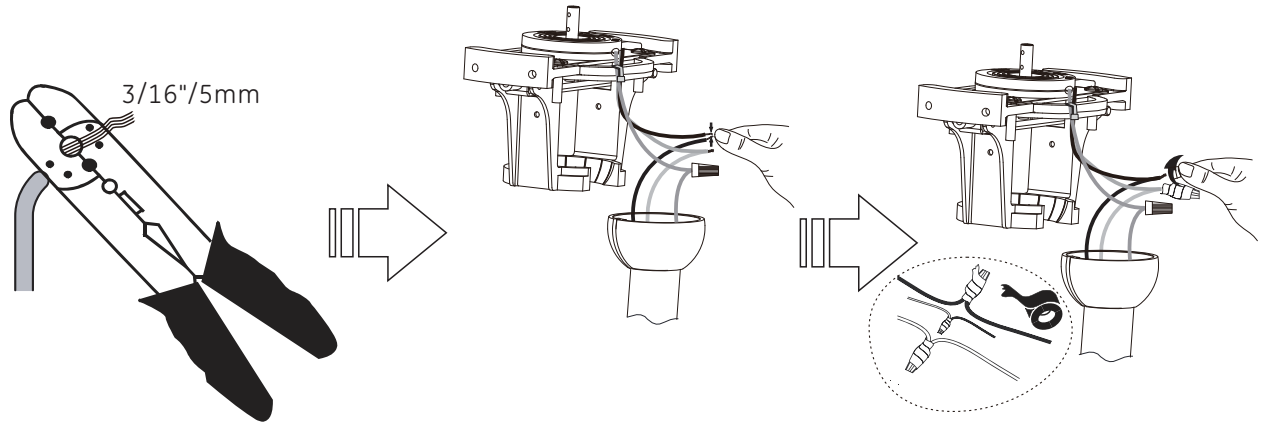

Strip the four wire leads at 3/16 inches (5mm).

Twist the same color wire leads together, white to white, black to black.

Using wire nut and secure with electrical tape.

⚠ CAUTION: Risk of electrical shock, make sure there are no conductor or copper wires exposed.

Supplemental Instructions

Changing Existing Downrod to Longer Downrod (sold separately)

⑥

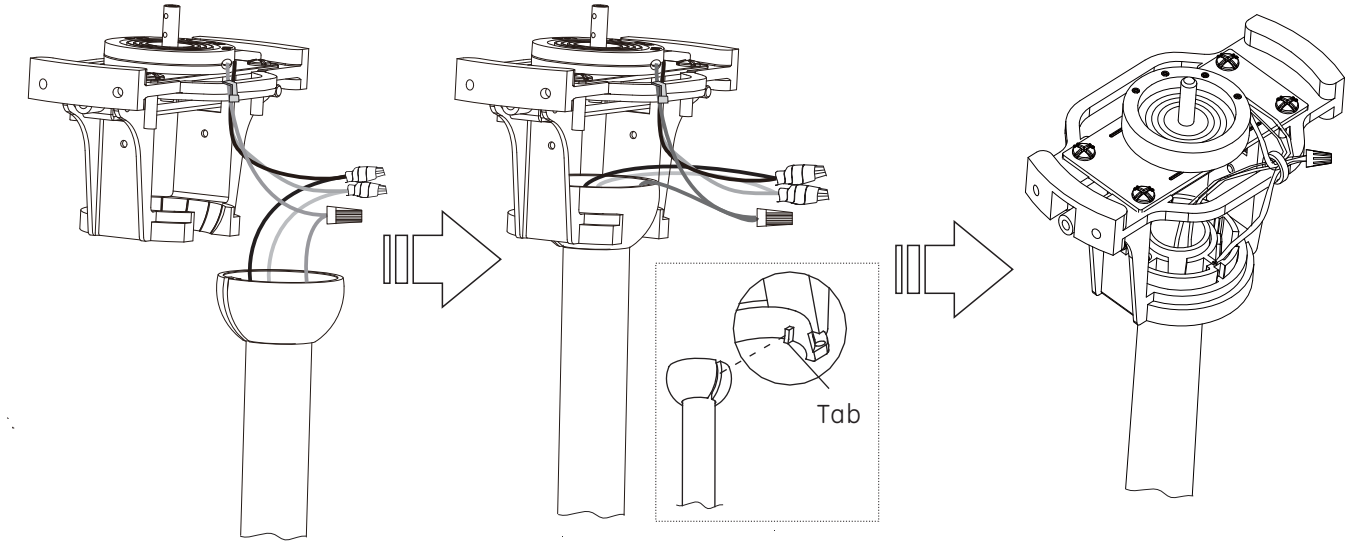

Re-seat the downrod assembly to the mounting bracket, making sure the groove of the ball is properly engaged into the tab of the mounting bracket as shown. Secure the wires with nylon tie as shown.

⑦

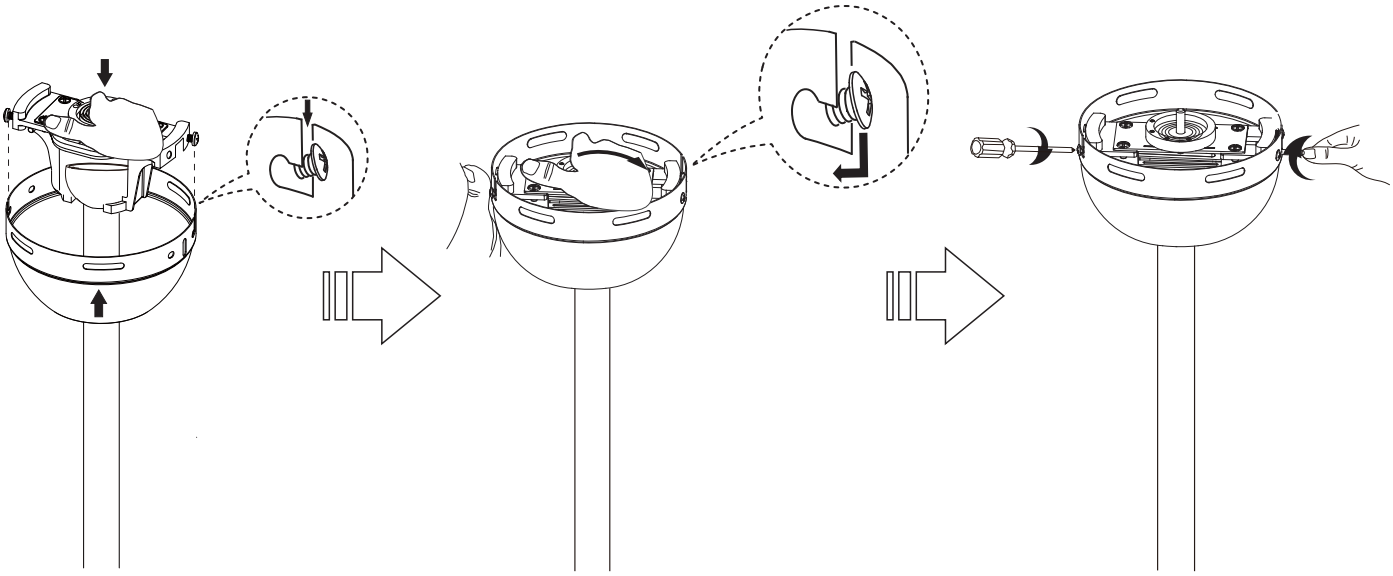

Insert canopy onto the new downrod and bracket assembly.
Turn the canopy clockwise to lock the screws into the L slots.
Re-attach the two screws and the push lever removed on step 2.

Once completed, follow the steps in the fan instruction manual to complete the fan installation.